NAVY TRAINING SYSTEM PLAN

FOR THE

AN/APG-79 ACTIVE ELECTRONICALLY SCANNED ARRAY (AESA) RADAR

N78-NTSP-A-50-0113/A

SEPTEMBER 2003

AN/APG-79 ACTIVE ELECTRONICALLY SCANNED ARRAY RADAR

EXECUTIVE SUMMARY

This Proposed Navy Training System Plan for the AN/APG-79 Active Electronically Scanned Array (AESA) Radar system was developed by NAVAIR to provide an estimate of the manpower, personnel, and training requirements necessary to support and sustain the AESA. The AESA is an Acquisition Category (ACAT) IC program in the System Development and Demonstration phase of the Defense Acquisition System (DAS). The program is on track for a December 2003 Milestone C decision prior to beginning the first phase of Low Rate of Initial Production (LRIP-I). The Production and Deployment phase of the DAS is tentatively scheduled for first quarter Fiscal Year (FY) 07. Initial Operational Capability (IOC) and the decision to proceed to Full Rate Production (FRP) are scheduled for first and second quarter FY07, respectively.

The AESA Radar will be the primary search/track and weapons control radar system for the F/A-18E/F Aircraft and may be employed on any F/A-18E/F mission to include Anti-Air Warfare, Strike Warfare, Anti-Surface Ship Warfare, Close Air Support, Tactical Air Control, Reconnaissance (to include high-resolution Ground Mapping), and Near Simultaneous Missions. The AESA Radar is the successor to the AN/APG-73 Radar and will provide greatly increased air-to-air detection/track ranges, enhanced air-to-ground targeting, longer launch ranges for stand-off weapons, and enhanced capability (including self-protective Electronic Warfare) against advanced threats. The system is expected to be vastly superior to its predecessor in both performance and ease of maintenance. It will be more affordable and have a lower overall Life Cycle Cost as the concept of Built-In Reliability has guided its development throughout the planning and design stages. It is envisioned that the AESA will interface with the Naval Aviation Logistics Command Management Information System (NALCOMIS) and the Automated Maintenance Environment (AME) to provide improved maintenance information at all levels. Where feasible and affordable, the AESA Radar system will make maximum use of open system architecture. Currently, the antenna is classified "Secret." Any changes to the security classification will be included in future updates to this NTSP.

The current maintenance concept is two-level: organizational to depot. At a minimum, organizational level maintenance will be capable of fault isolation down to the faulty assembly. Raytheon Corporation, acting as the interim depot until establishment of the organic depot, will perform all repairs to include overhauling, rebuilding, and calibration of equipment.

The AESA training program will provide for initial and follow-on training for operators and maintenance personnel. The contractor will provide initial training for Navy Test and Evaluation aircrew and maintenance personnel in support of Developmental Test and Operational Test, running from May 2003 to July 2005. The contractor will also develop and conduct initial training for Fleet Readiness Squadron (FRS) Instructors and Naval Air Maintenance Training Unit (NAMTRAU) Instructors.

AN/APG-79 ACTIVE ELECTRONICALLY SCANNED ARRAY RADAR

To accomplish follow-on AESA training, aircrew-training syllabi will incorporate the use of Aircrew Simulators (Tactical Trainers), Computer-Based Training (CBT), and actual aircraft flights to ensure Pilot and Weapons Sensor Officer (WSO) proficiency. The maintenance curriculum will utilize the F/A-18E/F Avionics Maintenance Trainer Set (MTS), CBT, and actual aircraft to convey the learning objectives. Software upgrades that provide AESA functionality in existing and planned simulators and trainers form an important part of integrating AESA into Navy aircrew and maintainer training.

Navy organic aircrew and maintenance training will begin in FY05 on the West coast at Lemoore, California, both at the Fleet Readiness Squadron (FRS) Fighter/Attack Aircraft Squadron (VFA)-122 and at the Maintenance Training Unit (MTU) 1038 NAMTRAU Lemoore. Pending a final decision, parallel aircrew and maintainer training tracks are to be established at the new East Coast FRS (tentatively VFA-174 which is due to be stood up at NAS Oceana, Virginia, in October 2003) and at MTU 1039 NAMTRAU Oceana as existing aircrew Training Devices are upgraded and a new Avionics MTS is acquired.

.

AN/APG-79 ACTIVE ELECTRONICALLY SCANNED ARRAY RADAR

TABLE OF CONTENTS

	Page
Executive Summary	i
List of Acronyms	iv
Preface	x
PART I - TECHNICAL PROGRAM DATA	
A. Nomenclature-Title-Program	I-1
B. Security Classification	I-1
C. Manpower, Personnel, and Training Principals	I-1
D. System Description	I-1
E. Developmental Test and Operational Test	I-3
F. Aircraft and/or Equipment/System/Subsystem Replaced	I-5
G. Description of New Development	I-5
H. Concepts	I-10
1. Operational	I-10
2. Maintenance	I-10
3. Manning	I-12
4. Training	I-15
I. Onboard (In-Service) Training	I-30
J. Logistics Support	I-30
K. Schedules	I-49
L. Government-Furnished Equipment and Contractor-Furnished Equipment Training Requirements	I-53
M. Related NTSPs and Other Applicable Documents	I-53
PART II - BILLET AND PERSONNEL REQUIREMENTS	II-1
PART III - TRAINING REQUIREMENTS	III-1
PART IV - TRAINING LOGISTICS SUPPORT REQUIREMENTS	IV-1
PART V - MPT MILESTONES	V-1
PART VI - DECISION ITEMS/ACTION REQUIRED	VI-1
PART VII - POINTS OF CONTACT	VII-1

AN/APG-79 ACTIVE ELECTRONICALLY SCANNED ARRAY RADAR

LIST OF ACRONYMS

A/A	Air-to-Air
A/S	Air-to-Surface
ACAT	Acquisition Category
ACS	Advanced Crew Station
ADL	Advanced Distributed Learning
AESA	Active Electronically Scanned Array
AIC	Avionics Integration Center
AIM	Air Intercept Missile
AMC	Advanced Mission Computer
AMC&D	Advanced Mission Computer and Displays
AME	Automated Maintenance Environment
AMRAAM	Advanced Medium-Range Air-to-Air Missile
AMTCS	Aviation Maintenance Training Continuum System
ANAV	Accurate Navigation
AT	Aviation Electronics Technician
ATIR	Annual Training Input Requirement
BIT	Built-In Test
BSC	Beam Steering Computer
CAI	Computer-Aided Instruction
CAIV	Cost as an Independent Variable
CANTRAC	Catalog of Navy Training Courses
CBT	Computer-Based Training
CDR	Critical Design Review
CFY	Current Fiscal Year
CIN	Course Identification Number
CISP	Common Integrated Signal Processor
CMI	Computer-Managed Instruction
CNATT	Center for Naval Aviation Technical Training
CNO	Chief of Naval Operations
COMLANTFLT	Commander, U. S. Atlantic Fleet
COMPACFLT	Commander, U. S. Pacific Fleet
COTS	Commercial Off-The-Shelf
CVRS	Cockpit Video Recording System
DA	Developing Agency
DAS	Defense Acquisition System

AN/APG-79 ACTIVE ELECTRONICALLY SCANNED ARRAY RADAR

LIST OF ACRONYMS

DECM	Defensive Electronic Counter Measures
DMI	Depot Maintenance Interservice
DoD	Department of Defense
DFIRS	Deployable Flight Incident Recording Set
DT	Developmental Test
DT&E	Developmental Test and Evaluation
DVMC	Digital Video Map Computer
ECP	Engineering Change Proposal
ECR	Electronic Classroom
ECS	Environmental Control System
EDM	Engineering Development Model
EMD	Engineering and Manufacturing Development
EP	Electronic Protection
ESOH	Environment, Safety, and Occupational Health
EW	Electronic Warfare
EXCOM	Executive Committee
FCNS	Fiber Channel Network Switching
FIRAMS	Flight Incident Recorder and Monitoring System
FMS	Foreign Military Sales
FOR	Field of Regard
FOT&E	Follow-on Operational Test and Evaluation
FRP	Full Rate Production
FRS	Fleet Readiness Squadron
FTD	Fleet Training Device
FTE	Factory Test Equipment
FY	Fiscal Year
H/W	Hardware
HAZMAT	Hazardous Material
HOL	Higher Order Language
HSI	Human Systems Integration
HTAT	Hornet Tactics Advisory Team
IBU	Interference Blanking Unit
ICD	Interface Control Document
ICW	Interactive Courseware

AN/APG-79 ACTIVE ELECTRONICALLY SCANNED ARRAY RADAR

LIST OF ACRONYMS

IDECM	Integrated Defensive Countermeasures
IETM	Interactive Electronic Training Manual
IFB	Integrated Forebody
IMI	Interactive Multimedia Instruction
IOC	Initial Operational Capability
IOT&E	Initial Operational Test and Evaluation
IPT	Integrated Process Team
IRR	Integrated Radar Rack
ISD	Instructional System Development
ISP	Integrated Support Plan
JHMCS	Joint Helmet Mounted Cueing System
KPP	Key Performance Parameter
LCC	Life Cycle Cost
LCS	Liquid Cooling System
LNA	Low Noise Amplifier
LORA	Level of Repair Analysis
LRC	Learning Resource Center
LRIP	Low Rate Initial Production
MATMEP	Maintenance Training Management and Evaluation Program
MCMTOMF	Mean Corrective Maintenance Time for Operational Mission Failures
MDG	Multipurpose Display Group
MFHBFA	Mean Flight Hours Between False Alarms
MFHBOMF	Mean Flight Hours Between Operational Mission Failures
MFHBUM	Mean Flight Hours Between Unscheduled Maintenance
MIDS	Multifunctional Information Distribution System
MLDT	Mean Logistics Delay Time
MPMS	Manpower and Personnel Mission Sponsor
MPT	Manpower, Personnel, and Training
MRIL	Master Repairable Item Listing
MSA	Mechanically Steered Array
MSS	Motion Sensing Subsystem
MSOFD	Mission Systems Operation and Function Description
MTIP	Maintenance Training Improvement Program
MTL	Master Task List

AN/APG-79 ACTIVE ELECTRONICALLY SCANNED ARRAY RADAR

LIST OF ACRONYMS

MTS	Maintenance Trainer Set
MTU	Maintenance Training Unit
MUX	Multiplexer
NA	Not Applicable
NALCOMIS	Naval Aviation Logistics Command Management Information System
NAMT	Naval Aviation Maintenance Trainer
NAMTRAU	Naval Air Maintenance Training Unit
NAMTRA GRU	Naval Air Maintenance Training Group
NAS	Naval Air Station
NATOPS	Naval Air Training and Operating Procedures Standardization
NAVAIR	Naval Air Systems Command
NAVICP	Navy Inventory Control Point
NAVMAC	Navy Manpower Analysis Center
NAVPERSCOM	Navy Personnel Command
NEC	Navy Enlisted Classification
NETC	Naval Education and Training Command
NLT	No Later Than
NOBC	Navy Officer Billet Code
NTMPS	Navy Training Management and Planning System
NTSP	Navy Training System Plan
OATMS	OPNAV Aviation Training Management System
OEM	Original Equipment Manufacturer
OMA	Organizational Maintenance Activity
OMF	Operational Mission Failure
OPEVAL	Operational Evaluation
OPNAV	Office of the Chief of Naval Operations
OPNAVINST	Office of the Chief of Naval Operations Instruction
OPO	OPNAV Principal Official
ORD	Operational Requirements Document
OT	Operational Test
PAA	Primary Aircraft Assigned
PCD	Percent Correction Detection
PCFI	Percent Correct Fault Isolation
PCU	Power Conditioning Unit
PDR	Preliminary Design Review

AN/APG-79 ACTIVE ELECTRONICALLY SCANNED ARRAY RADAR

LIST OF ACRONYMS

PEDD	Portable Electronic Display Device
PESHE	Programmatic Environmental, Safety, and Occupational Health Evaluation
PIDS	Positive Identification System
PIP	Product Improvement Program
PMA	Program Manager, Air
PTT	Part Task Trainer
REX	Receiver-Exciter
RF	Radio Frequency
RFI	Ready for Issue
RFT	Ready For Training
RPS	Radar Power Subsystem
RUG	Radar Upgrade
RWR	Radar Warning Receiver
S/W	Software
SAMP	Single Acquisition Management Plan
SAMT	Simulated Aviation Maintenance Trainer
SAR	Synthetic Aperture Radar
SCS	Software Configuration Set
SCORM	Sharable Content Object Reference Model
SDC	Signal Data Computer
SE	Support Equipment
SM&R	Source, Maintenance, and Recoverability
SMS	Stores Management System
STE	Special Test Equipment
T/R	Transmit/Receive
TA	Training Agency
TACTS	Tactical Aircrew Combat Training System
TAMMAC	Tactical Air Moving Map Capability
TD	Training Device
TECHEVAL	Technical Evaluation
TEC	Training Equipment Change
TECR	Training Equipment Change Request
TEMP	Test and Evaluation Master Plan
TFFMS	Total Force Manpower Management System

AN/APG-79 ACTIVE ELECTRONICALLY SCANNED ARRAY RADAR

LIST OF ACRONYMS

TOFT	Tactical Operational Flight Trainer
TRPPM	Training Planning Process Methodology
TSA	Training Support Agency
TTE	Technical Training Equipment
TTSARB	Technology Transfer and Security Assistance Review Board
UIC	Unit Identification Code
VF	Fighter Aircraft Squadron
VFA	Fighter/Attack Aircraft Squadron
VX	Air Test and Evaluation Squadron
WRA	Weapon Replaceable Assembly
WSO	Weapons Sensor Officer
WTT	Weapons Tactical Trainer

AN/APG-79 ACTIVE ELECTRONICALLY SCANNED ARRAY RADAR

PREFACE

This Proposed Navy Training System Plan (NTSP) was developed to update the Draft NTSP for the AN/APG-79 Active Electronically Scanned Array (AESA) Radar, N-78-NTSP-A-50-0113/I, dated February 2003. This NTSP is a product of the Training Planning Process Methodology (TRPPM), as outlined in Office of the Chief of Naval Operations (OPNAV) publication P-751-3-9-97.

Manpower requirements are generated using current F/A-18E/F activity manpower requirements from the Total Force Manpower Management Systems (TFMMS), TFFMS-derived data stored in the Navy Training Management and Planning System (NTMPS), and the F/A-18E/F Transition Schedule.

Where supporting data is incomplete, approximations are made using known F/A-18 Aircraft program information; e.g., where F/A-18E/F Pilot and WSO follow-on training course pipeline information has not been developed or finalized, existing F/A-18 Aircrew course information is used to build a reasonable, approximated projection of F/A-18E/F Aircrew training requirements and student throughput.

This NTSP incorporates the comments resulting from the review of the Draft NTSP of February 2002. Comments were received from the Human Performance Center; Naval Education and Training Center; and Center for Naval Aviation Technical Training.

PART I - TECHNICAL PROGRAM DATA

A. NOMENCLATURE-TITLE-PROGRAM

1. Nomenclature-Title-Acronym. AN/APG-79 Active Electronically Scanned Array (AESA) Radar

2. Program Element. 0204136N

B. SECURITY CLASSIFICATION

1. System Characteristics ..... Secret
2. Capabilities ..... Secret
3. Functions..... Unclassified

C. MANPOWER, PERSONNEL, AND TRAINING PRINCIPALS

OPNAV Principal Official (OPO) Program Sponsor ..... CNO (N780)

OPO Resource Sponsor..... CNO (N780D1)

Developing Agency (DA)..... NAVAIR (PMA265)

Training Agency (TA) ..... COMLANTFLT (721)
COMPACFLT (N70)
CNATT (FID N5)

Training Support Agency (TSA) ..... NAVAIR (PMA205)

Manpower and Personnel Mission Sponsor (MPMS) ..... CNO (N122C1)
NAVPERSCOM (PERS-4, PERS-404)

Director of Naval Education and Training ..... CNO (N00T)

D. SYSTEM DESCRIPTION. The AN/APG-79 Active Electronically Scanned Array (AESA) Radar is the product of a multi-phase program for developing and integrating an advanced AESA Radar into the F/A-18E/F "Super Hornet." The integration of the AN/APG-79 into the F/A-18E/F greatly improves the weapon system's threat detection range, high resolution Synthetic Aperture Radar (SAR) ground mapping capability, survivability, supportability, and reliability.

A distinguishing feature of the AESA radar is the antenna, which is a fixed mounted array of hundreds of miniature Transmit and Receive (T/R) modules, each connected to its own Low

Noise Amplifier (LNA). Each T/R module individually amplifies Radio Frequency (RF) radiation to be transmitted. The sum of the energy from all of the T/R modules is significantly greater than that of the AN/APG-73 transmitter, and the failure of a single module only slightly reduces system performance while the radar systems continue to function. Since each T/R module has its own LNA, the signal path of radar return energy prior to the amplifier is shortened, which reduces signal attenuation (loss) and system noise, and provides increased sensitivity. The antenna is fixed, eliminating the need for manual alignment procedures and removing the possibility of system failure from moving parts; instead the AESA antenna beam is electronically steered by the Beam Steering Computer (BSC), which adjusts the phase of the RF leaving each T/R module. This electronic beam steering provides the capability to point the antenna main beam from one position to another in less than a millisecond. The rapid repositioning of the antenna main beam, called "beam agility," provides the AN/APG-79 AESA radar system with unique advantages. The system design provides for unprecedented high performance with corresponding low maintenance requirements through innovative design concepts and built in reliability.

The program was conceptualized in 1992 and has been active since that date. As indicated in the Operational Requirements Document (ORD) and system specification, the AESA Radar capabilities must not be less than the existing AN/APG-73 radar system in terms of lethality, survivability, maintainability, and reliability. Additionally, AESA will include provisions for new technology growth for future threat environments.

The classified ORD, 568-58-00, signed 13 November 2000, includes a detailed description of the AN/APG-79 AESA radar's Key Performance Parameters (KPP), system requirements, and general descriptions of operational capabilities. Key operational requirements are:

- Improvement in Air-to-Air (A/A), multi-target detection and tracking
- High resolution Air-to-Ground (A/G) SAR mapping
- Reduced SAR Target Location Error
- Improved Operational Availability (A_o)
- Interleaved A/A and A/G radar performance
- Interoperability

The F/A-18E/F AESA Radar System is an upgraded version of the currently operational AN/APG-73 Radar System and is part of the F/A-18 Roadmap Program. It is a key element of the F/A-18E/F Block II Upgrade Program that integrates the Advanced Crew Stations (ACS), Type II Advanced Mission Computer and Displays (AMC&D), Higher Order Language (HOL) software, Fiber Channel Network Switching (FCNS), Tactical Air Moving Map Capability (TAMMAC), Digital Video Map Computer (DVMC), Accurate Navigation (ANAV), and Engineering Change Proposal (ECP) 6038 Forward Fuselage.

The AN/APG-79 AESA radar system is designed with affordability and acquisition reform in the forefront and Cost as an Independent Variable (CAIV) in mind. All performance measures not identified as KPPs are understood to be potential candidates for cost-versus-benefit trade under the CAIV philosophy.

1. Operational Uses. The AN/APG-79 AESA Radar may be employed on any F/A-18E/F mission to include: Anti-Air Warfare (AAW), Strike Warfare, Electronic Warfare (EW), Anti-Surface Ship Warfare, Close Air Support, Tactical Air Control, Reconnaissance and Near Simultaneous Missions. It may be used by F/A-18E/Fs in single and/or multi-aircraft formations at low, medium, and high altitudes. It is a coherent, multi-mode radar that provides an all-aspect, "look-down/shoot-down" capability, even under adverse conditions that will allow for time-multiplexed (near simultaneous) operations of the A/A, Air-to-Surface (A/S), Ground Mapping, and EW modes of the radar.

The A/A capabilities will allow the aircrew to detect, track, and engage multiple air-to-air targets with medium and short-range missiles and a 20-mm gun. The AN/APG-79 radar has been designed to enable the aircrew to detect and process targets well before they enter the maximum range of the Super Hornet's air-to-air missiles, allowing missile launch at maximum range.

The A/S functions will allow the aircrew to locate and attack ground targets in all types of weather. The AESA will generate high-resolution ground maps, permitting all-weather, precision bombing and long-range stand-off weapon delivery. The AESA EW functions will include both passive identification of radiating weapon systems detected within the AESA Field of Regard (FOR) and frequency range, and active electronic countermeasures (jamming) for enhanced survivability.

2. Foreign Military Sales. An analysis of cooperative opportunities at early decision points in the defense acquisition process for major defense acquisition programs is mandated by federal law, Title 10 United States Code (USC), Section 2350a. The Technology Transfer and Security Assistance Review Board (TTSARB) Case #01-06 of 7 May 2001, F/A-18E/F Super Hornet Lot XXVII Worldwide Release Policy documents U.S. Navy policy on support of the sale of F/A-18E/F Aircraft with defined configurations for Foreign Military Sales (FMS). These configurations are subject to approval from the Department of Defense (DoD) Tri-Service Review/Executive Committee (EXCOM). EXCOM letter dated 31 July 2001, details the approved configurations and restrictions regarding the sale of an AN/APG-79 AESA Radar-equipped F/A-18E/F. The AESA Radar program will conform to these policy limitations and subsequent guidance concerning foreign military sales of the AN/APG-79 Radar system, as part of the F/A-18E/F weapon system. FMS analysis indicates that several countries may have requirements for an affordable aircraft with the unique multi-mission capability and performance characteristics of the F/A-18E/F aircraft, including: Australia, Kuwait, Malaysia, Singapore, Switzerland, and the United Kingdom.

E. DEVELOPMENTAL TEST AND OPERATIONAL TEST

1. Developmental Test and Evaluation. The Developmental Test and Evaluation (DT&E) program began in May 2003 and is planned to be completed in July 2005; it is divided into four distinct Developmental Test (DT) periods:

- **DT-IIA.** DT-IIA focuses on demonstrating hardware functionality. Two Lot 26 F/A-18F Aircraft and a unique F-19 aircraft will be modified with the AESA Radar at VX-31 China Lake for DT/OT. Data will be collected during the latter portion of DT-IIA using a flight release version of AESA Test Tape #1.

- **DT-IIB Phase 1.** DT-IIB Phase 1 will primarily focus on maturing the AESA hardware, software functionality, and sub-build content. In addition to AESA testing, DT-IIB Phase 1 will also include the Environmental Control System (ECS), fuel management systems, and propulsion flight tests.

- **DT-IIB Phase 2.** DT-IIB Phase 2 will initiate testing of the Software Configuration Set (SCS) H-3 Mission Computer software program. Electromagnetic Interference, Susceptibility, and Compatibility will be performed on Lot 26 ECP 6038/AESA aircraft.

- **DT-IIC.** DT-IIC will demonstrate the full functionality of the AESA Radar. Full weapons employment functionality will also be demonstrated. The Technical Evaluation (TECHEVAL) summary follows immediately after completion of DT-IIC. Verification of maintainability and reliability predictions for the AESA radar will be achieved through demonstrations and tests prior to and TECHEVAL. Reliability, maintainability, and supportability are key elements in system design and trade-off analysis.

Each major DT period (DT-IIA, B, and C) will be followed by a separate Operational Test (OT) period. OT-IIA and B will be a combined DT/OT, with a dedicated period of independent OT to allow an applicable and credible assessment of expected final performance. OT-IIC will be a complete Operational Evaluation (OPEVAL). OPEVAL is tentatively scheduled for the period January through July 2006. See Part V of this NTSP for other AESA schedule dates.

2. Operational Test and Evaluation. Operational Test and Evaluation of the AN/APG-79 AESA Radar will be conducted in two parts, initial and follow-on.

a. Initial Operational Test and Evaluation. Initial Operational Test and Evaluation (IOT&E) will be conducted at NAVAIR China Lake, California, in three phases. The system will be operated and maintained by USN Air Test and Evaluation squadron.

Initial Operational Test and Evaluation Phases	
OT-IIA	This phase is intended to support recommendations for continued future program development.
OT-IIB	
OT-IIC OPEVAL	This phase is intended to support a fleet introduction recommendation.

b. Follow-on Operational Test and Evaluation. Follow-on Operational Test and Evaluation (FOT&E) will be conducted to verify the operational suitability and effectiveness of the production model AESA Radar and will include OT-III and OT-IV as required. OT-IIA, OT-IIB, and OT-IIC will be conducted at various open-air ranges including NAVAIR China Lake, and various laboratory facilities to include Boeing Avionics Integration Center (AIC), Boeing Flight Simulator facility, and the Radar Systems Integration Laboratory in El Segundo, California.

F. AIRCRAFT AND/OR EQUIPMENT/SYSTEM/SUBSYSTEM REPLACED. The AN/APG-79 AESA will replace the older Mechanically Steered Array (MSA) AN/APG-73 Radar in the F/A-18E/F Aircraft. The AESA Radar is planned for incorporation in new production F/A-18E/F Aircraft, beginning with the last eight aircraft of Lot 27. The Navy budgetary plan provides for the purchase of AESA Radar systems for 277 new production and 136 retrofit F/A-18E/F Aircraft, for a total of 413 systems.

The AN/APG-79 AESA entered Engineering and Manufacturing Development (EMD) in February 2001, a year after new start approval. In November 2002, Raytheon conducted the first public demonstration of a fully integrated AN/APG-79 AESA system in a laboratory at its El Segundo facility. Two AN/APG-73 equipped Lot 26 aircraft will be fitted with EMD version AESA systems to support DT/OT at NAVAIR China Lake. A third, unique aircraft (dubbed the "F-19") will also be equipped with an EMD version AESA system to support DT/OT, including "first flight," which occurred in June 2003. There is no plan to retrofit these three aircraft with new production AESA Radar systems in the future. In all, seven complete and one partial EMD version AESA systems will be built. These are not included in the previously mentioned 413 production AESA systems.

G. DESCRIPTION OF NEW DEVELOPMENT

1. Functional Description. The AESA Radar will be the primary search/track and weapons control radar for the F/A-18E/F Aircraft. The AESA Radar may be employed on any F/A-18E/F mission to include Anti-Air Warfare, Strike Warfare, Anti-Surface Ship Warfare, Close Air Support, Tactical Air Control, Reconnaissance, and Near Simultaneous Missions.

As compared with the AN/APG-73 Radar Upgrade (RUG) Phase I and Phase II upgrades, the AESA Radar will provide increased air-to-air detection/track ranges, air-to-ground targeting, longer launch ranges for stand-off weapons, and enhanced capability against advanced threats.

2. Physical Description. The AESA Radar avionics include thirty-one Weapon Replaceable Assemblies (WRAs). There are no components designated as Shop Replaceable Assemblies (SRAs) as all line-removable/replaceable sub-assemblies (including all racks, sub-racks, sealed modules, and antenna) are considered to be separate WRAs.

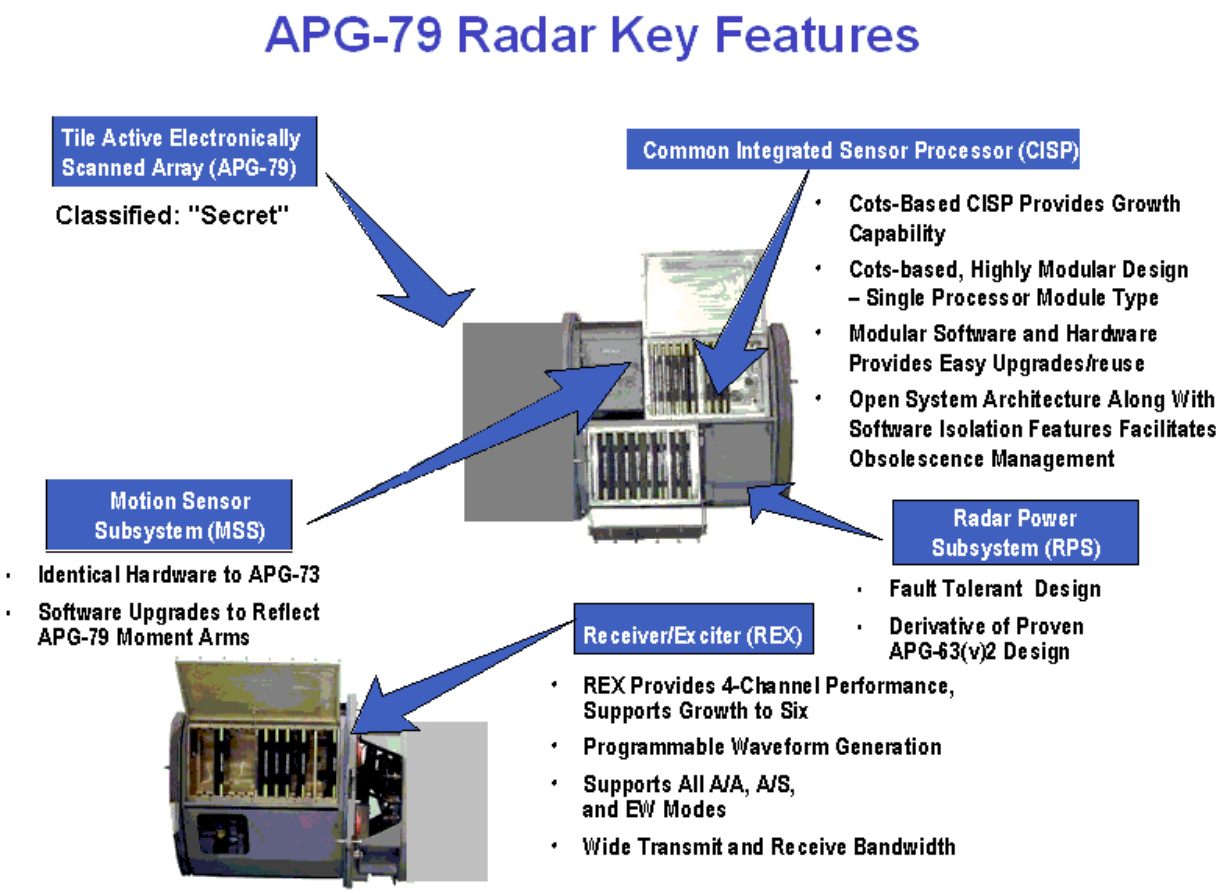

Figure I-1. AN/APG-79 AESA Features

The AESA Radar system is supported by an Integrated Radar Rack (IRR). This WRA supports and provides interconnectivity for all other system WRAs. Mounted on the IRR are:

- **Wide Band Antenna** (classified "Secret"), mounted to the front of the IRR along with the Narrow Band Switch Matrix line replaceable subassembly

- **Motion Sensing Subsystem (MSS)**
- **Power Conditioning Unit (PCU)**
- **Three "Sub-Racks"** containing a combined total of 24 installed modules (with spare slots left for future expanded capability). Each sub-rack can be opened to access the WRA modules within for maintenance purposes. These sub-racks are:
  - **Radar Power Subsystem (RPS) Sub-Rack** (located lower section)
  - **Receiver Exciter (REX) Sub-Rack** (located upper right section)
  - **Common Integrated Sensor Processing (CISP) Sub-Rack** (located upper left section)

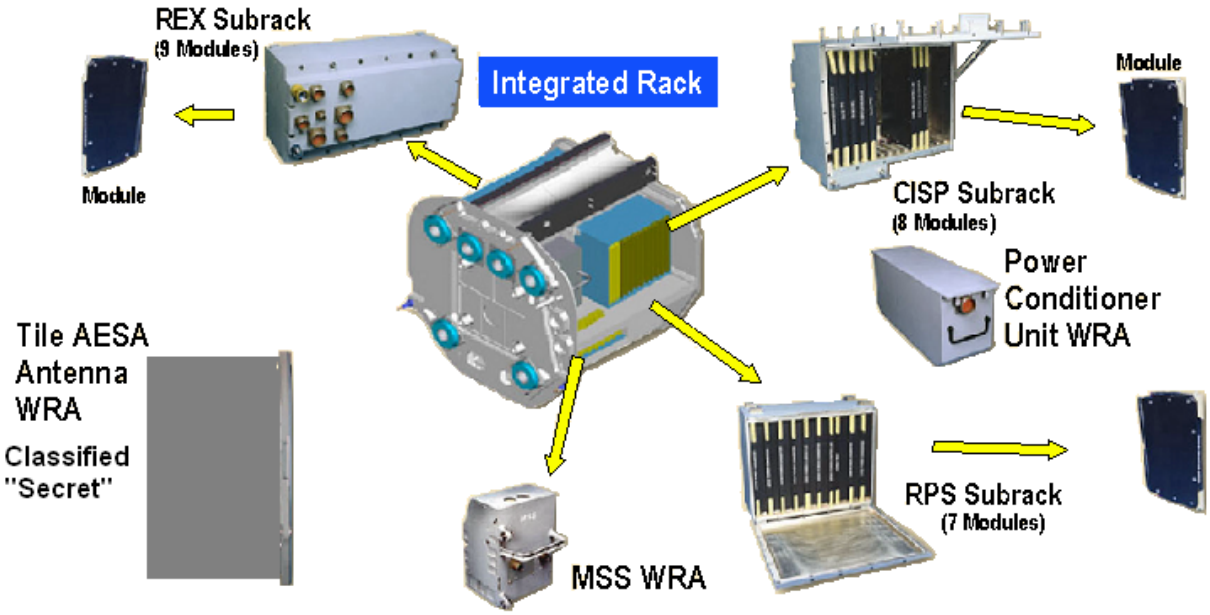

Figure I-2. AN/APG-79 AESA System Components and Placement

AN/APG-79 AESA RADAR SYSTEM WRAs	
QUANTITY	**WRA**
1	Integrated Radar Rack (IRR)
1	AESA Antenna
1	Motion Sensing System (MSS)
1	Power Conditioning Unit (PCU)

AN/APG-79 AESA RADAR SYSTEM WRAs	
QUANTITY	**WRA**
3	Sub-racks (one each for: REX, CISP, RPS)
9	Receiver Exciter (REX) Modules
7	Radar Power Subsystem (RPS) Modules
8	Common Integrated Sensor Processor (CISP) Modules
31	**Total WRAs**

The wide-band radome is attached on a slide rail and must be unlocked and slid forward in order to access the radar system for maintenance. With the exception of the antenna, all system WRAs are accessible from one side or the other of the main rack. Access is gained when the rack/radome is extended out of the aircraft nose barrel on built-in slide rails. The radome must be detached in order to remove or replace the antenna WRA. The initial AESA Radar set design weight is less than 720 pounds. Other ancillary equipment in an AESA-equipped F/A-18 includes the wideband radome, FCNS and additional heat exchangers in the enhanced ECS.

3. New Development Introduction. The initial AN/APG-73 RUG Phase I developed key radar receiver and processor subsystems to increase hardware memory and throughput, and implemented more effective Electronic Protection (EP). The AN/APG-73 RUG Phase II incorporated additional components required to provide very high-resolution ground maps. The RUG Phase III, referred to as AESA Phase I, calls specifically for the incorporation of the AESA Radar into the F/A-18E/F Aircraft. The AESA will be introduced to the Navy as a Product Improvement Program (PIP). The Navy will have a mixed fleet of F/A-18E/F Aircraft, some equipped with the AN/APG-73 and the rest with the AN/APG-79 AESA Radar.

4. Significant Interfaces. The AESA will interface with numerous systems on the F/A-18E/F Aircraft including the AN/ALR-67(V)3, AN/ALE-50/55, Joint Helmet Mounted Cueing System (JHMCS), Positive Identification System (PIDS), Multifunctional Information Distribution System (MIDS), AMC&D, and ACS.

The AESA system consists of structural and avionics upgrades to the F/A-18E/F that reduce vulnerability and enhance survivability. Air vehicle sub-systems impacted include: forward and aft Crew Stations, Fiber Channel Networks (FCNs), AMC&D, ECS, Liquid Cooling System (LCS), Integrated Forebody (IFB), ANAV, electrical systems, and propulsion systems. The following table lists significant interfaces showing whether Hardware (H/W) or Software (S/W) is involved and the corresponding Interface Control Document (ICD).

SYSTEM/SUBSYSTEM INTERFACED	H/W – S/W	INTERFACE CONTROL DOCUMENT
Advanced Mission Computer (AMC) Multiplexer (MUX) Bus Message Listing	S/W	NA
AESA Radar Subsystem	H/W & S/W	ICD-F/A-18E/F-056
Air Conditioning System ICD	S/W	ICD-74J830186
AN/ALR-67(V)3 Radar Warning Receiver (RWR)	H/W & S/W	ICD-F/A-18E/F-021
Engine Specification	S/W	E1311
Environmental Control System	H/W & S/W	ICD 74-830002
F/A-18E/F (Air Intercept Missile) AIM-120C Advanced Medium-range Air-to-Air Missile (AMRAAM)	H/W & S/W	ICD-F/A-18E/F-006
F/A-18E/F Defensive Electronic Counter Measures (DECM) Onboard and Offboard systems ICD	H/W & S/W	ICD-F/A-18E/F-024
Instrumentation Pallet ICD	H/W & S/W	TBD
Interference Blanking Unit (IBU)	H/W & S/W	PS 74-870256
Mission Planning	S/W	ICD-F/A-18E/F-043
Propulsion Interface	S/W	ICD-F/A-18E/F-001
Signal Data Computer (SDC)	H/W & S/W	SDC-IDD-16E
Stores Management System	S/W	AN/AYK-22-15C/16E-IDD
Tactical Aircrew Combat Training System (TACTS)	S/W	ICD-F/A-18E/F-014

5. New Features, Configurations, or Material. The AN/APG-79 AESA replaces the conventional mechanically scanned antenna with a radar beam delivered by a solid-state antenna array that can be steered at close to the speed of light. This rapid beam scan feature improves performance dramatically, and because the array is solid state, mechanical breakdowns will be virtually eliminated. Following the laboratory development phase, the radar will be extensively tested at NAVAIR China Lake beginning in 2003.

Note: The AESA Radar antenna's characteristics and capabilities are classified Secret. Security procedures for maintaining, transporting, and storing the antenna, are under development.

H. CONCEPTS

1. Operational Concept. The AESA will be operated by Navy F/A-18E/F Pilots and Weapons Sensor Officers (WSO) with Navy Officer Billet Codes (NOBC) 1311 and 1321, respectively, at ashore and afloat activities. The F/A-18E is a single-seat aircraft with only a Pilot operator, while squadrons operating the two-sear F/A-18F also have a WSO requirement.

2. Maintenance Concept

a. Organizational. It is currently expected that the AESA will be maintained under a two-level, organizational to depot maintenance concept. The development of the Maintenance Plan (MP) for the AN/APG-79 AESA radar system followed the principles of Integrated Logistics Support (ILS) as prescribed by NAVAIR policy. A formal Reliability and Maintainability (R&M) program was initiated. A Level of Repair Analysis (LORA) was performed based on available reliability and estimated unit cost data, which supported the two-level maintenance concept. The Maintenance Plan (MP) rationale for the AN/APG-79 AESA radar system was developed from the Logistics Support Analysis (LSA) process. LSA considered numerous criteria including maintenance data, LORA recommendations, experience on similar equipment, and best engineering judgments. A Life Cycle Cost (LCC) and support concept trade-off analyses is being conducted to determine the lowest cost support solution.

The AESA will be maintained at organizational level activities by Navy Aviation Electronics Technicians (AT) with Naval Enlisted Classification (NEC) codes 8341 (Career) and 8841 (Initial) assigned to Navy F/A-18E/F Aircraft squadron Work Center 210 (Avionics). At a minimum, the squadron will be able to isolate, remove, and replace faulty components down to the WRA. Defective or retrograde WRAs will be sent to the depot level activity for repair or condemnation in accordance with the MP and as indicated by the Source, Maintenance, and Recoverability (SM&R) codes. All repairs beyond squadron maintenance capabilities will be performed by the depot.

(1) Preventive Maintenance. In accordance with the two-level maintenance concept, preventive maintenance functions performed by maintainers will be limited to pre- and post-operational inspection, system Built-In Test (BIT)/self-test, cleaning, and corrosion control. Depreservation of Ready for Issue (RFI) spares will be performed in accordance with the manufacturer's recommendations and applicable Electrostatic Discharge (ESD) precautions prior to installation. This system contains ESD sensitive devices and must be handled in accordance with MIL-HDBK-263. Properly trained supply and maintenance personnel with appropriately equipped supply and maintenance facilities are required for protection of the ESD sensitive assemblies or subassemblies during all supply and maintenance functions. Preservation for shipment will be performed by the Supply activity responsible for returning the faulty WRA to depot for repair.

(2) Corrective Maintenance. Corrective Maintenance is built around the BIT/self-test program that automatically indicates the operational condition of the system. The aircraft self-test program isolates faults to a defective WRA. Upon verification of the fault, the defective WRA is removed and a Ready For Issue (RFI) asset from Navy spares is installed and

again checked. BIT/self-test operations and software loading are the only organizational level maintenance actions performed with power applied to the AESA system. No system or WRA adjustments will be required. All other maintenance actions will be performed with power removed from the AESA system.

b. Intermediate. Preliminary LORA results indicate that no intermediate level maintenance is required. Currently, AESA system development has not provided for AESA component design to include external test points or interfaces adequate to support intermediate level servicing and repair.

c. Depot. Originally, the AESA system was developed for an organizational level to Original Equipment Manufacturer (OEM) depot level maintenance concept; however, AESA is currently designated as a CORE System, and CORE law, as required by Title 10, USC 2464, dictates that there be an organic depot. The DMI study completed in August 2002 designated NADEP North Island as the Navy depot source of repair for AN/APG-79 Radar, with the depot stand-up planned for No Later Than (NLT) 2010. Depot Factory Test Equipment (FTE) and Special Test Equipment (STE) analysis began in November 2002 and was completed in June 2003. It is anticipated that FTE/STE procurement will begin in FY05.

Until an organic depot capability is established (NLT 2010), the manufacturer, Raytheon Corporation, will perform repair, calibration, and overhaul of AN/APG-79 AESA components turned in to the supply system that are beyond the repair capabilities of the organizational level maintenance activity. The local Navy Supply Unit will prepare the failed WRA for shipment to Raytheon using the Navy Inventory Control Point (NAVICP) Master Repairable Item Listing (MRIL) for delivery to one of the following repair locations:

COMPONENT	REPAIR LOCATION
Antenna	Raytheon - El Segundo, California
CISP	
REX	Raytheon - Forest, Mississippi
RPS	
PCU	
IRR	MechTronics - Phoenix, Arizona
MSS	Honeywell - Clearwater, Florida

In order to stand up an organic depot repair capability, Raytheon will provide the quantity and quality of technical data (engineering drawings, parts placement diagrams, test requirements, etc.) needed to support an organic intermediate level repair capability.

d. Interim Maintenance. A fully organic and sustainable organizational level maintenance capability will support the AESA system at Initial Operational Capability (IOC). Boeing, Raytheon, and the Navy will provide personnel for support of the AESA until IOC. Further contractor support (if required) will be funded by a separate contract. The AESA Navy Support Date (NSD) will occur no later than four years after IOC.

e. Life Cycle Maintenance Plan. The F/A-18E/F Life Cycle Maintenance Plan is not expected to be impacted by the deployment of the AESA radar system.

3. Manning Concept. The AESA Radar system will be operated exclusively by existing F/A-18E/F aircrew personnel. In addition to a Pilot (1311), the two-seat F/A-18F includes a WSO (1321). Maintenance of the AESA will be performed by currently assigned ATs holding NEC 8841 or 8341. The manpower requirements for the AESA are well within the capabilities of the existing Navy enlisted rating structure. There are no quantitative changes to the current squadron manpower requirements. However, training activity instructor requirements may increase temporarily as the AESA is phased in, i.e., during the transition from AN/APG-73 to AN/APG-79.

Projected operator and maintenance manpower summaries are provided below:

- Operator and maintainer manpower requirements will remain unchanged over the seven-year transition period.
- Instructor manpower requirements will remain unchanged as AN/APG-73 student throughput decreases and AN/APG-79 student throughput increases. The AN/APG-79 course length, however, may be expanded over the AN/APG-73 course to accommodate both systems during the transition period.
- The funding goals for the AN/APG-79 manpower authorization are as follows:
  - FRS (Training) 100 percent funded billets
  - Fleet Aircrew – funded in accordance with the Required Operational Capabilities/Projected Operation Environment (ROC/POE) crew factor and seat ratio
  - Fleet Enlisted – 90 percent of M+1 requirements funded (current N78 programming for transitioning squadrons)

a. Estimated Maintenance Man-Hours per or Flight Hour. The suitability thresholds in the following table are the minimum installed performance requirements the AESA Radar must contractually satisfy.

INSTALLED SUITABILITY REQUIREMENTS		
CAPABILITY	**THRESHOLD**	**OBJECTIVE**
Operational Availability (A_o) (Notes 1, 6) (KPP)	95 %	98 %
Reliability (Notes 2, 6): Mean Flight Hours Between Operational Mission Failures-System (MFHBOMF)	62 Flight Hours	180 Flight Hours
Maintainability (Notes 3, 6): Mean Corrective Maintenance Time for Operational Mission Failures (MCMTOMF)	1.5 Hours	1.0 Hour
Built-In-Test Performance (Notes 4, 6) Percent Correction Detection (PCD) Percent Correct Fault Isolation (PCFI)	 85 % 85 %	 90 % 90 %
Mean Flight Hours Between False Alarms (MFHBFA) (Notes 5, 6)	185 Flight Hours	350 Flight Hours
Mean Flight Hours Between Unscheduled Maintenance (MFHBUM) (Note 6)	20 Flight Hours	30 Flight Hours

Note 1: A_o is defined as Up-time divided by the sum of Up-time plus Down-time. A_o is valid when AESA is operated in an operational mission scenario. Mean Logistics Delay Time (MLDT) is a subset of Down-time, and for the purposes of this calculation MLDT = 2.0 hours. The 2.0 hours MLDT allows for the average awaiting supply time this system is expected to achieve in the fleet (i.e., replacements should be procured to support a 2.0 hour MLDT after the system passes OT). Down-time also includes time spent troubleshooting and repairing the system. All other time is Up-time.

Note 2: MFHBOME equals the Total System Flight Hours divided by the Total Number of Operational Mission Failures (OMF). OMF are failures that preclude successful completion of the mission. System failures include hardware failures and/or software faults that occur in the AESA Radar. Multiple incidents of the same OMF are only counted once per flight.

Note 3: MCMTOMF is the average elapsed corrective maintenance time required to repair all OMFs. It includes time for maintenance preparation, fault isolation, location, onboard parts procurement, and fault correction, as well as follow-up checkout time. Offboard logistics delay time and time required to gain access to the system is not included.

Note 4: BIT Definitions:

- PCD equals the number of correct detections divided by the total number of confirmed faults times 100 (to express quotient as a percent).

– PCCFI equals the number of correct fault isolations (to a faulty WRA) divided by the number of correct detections times 100 (to express the quotient as a percent).

Note 5: MFHBFA is the total number of flight hours divided by the total number of false alarms. False alarms are faults identified by Maintenance Status Panel (MSP) BIT codes that indicate an apparent need for maintenance later confirmed at the organizational or depot level to be erroneous, i.e., no real failure existed. If the same erroneous BIT indication occurs multiple times in one flight, it only counts as one occurrence for purposes of satisfying this requirement.

Note 6: Small Sample Size - During DT and/or OT, it may not be feasible to fly enough hours to develop a statistically meaningful database for some requirements. Use of pre-faulted components in Maintenance Demonstrations (M-DEMO), BIT maturation process, and/or results of laboratory reliability testing will be considered as a means of resolving problems that arise from small sample size conditions.

a. Proposed Utilization. The AESA operating requirement hours for individual activities will be determined by the F/A-18E/F Aircraft utilization rates found in the squadron ROC/POE documents.

b. Recommended Qualitative and Quantitative Manpower Requirements. This NTSP projects manpower requirements in terms of officer and enlisted billets using those activities that have already transitioned to the F/A-18E/F as models for F/A-18E, F/A-18F, or dual E/F (e.g., the FRS) activities.

TYPE ACTIVITY	REQUIRED BILLET	QUANTITY
F/A-18E – VFA	1311 ATC 8341 AT1 8341 AT1 8341/6701 AT2 8341 AT3 8841 ATAN 8841	19 1 2 1 5 5 9
F/A-18F – VFA	1311 1321 ATC 8341 AT1 8341 AT1 8341/6701 AT2 8341 AT3 8841 ATAN 8841	20 18 1 2 1 5 5 8

TYPE ACTIVITY	REQUIRED BILLET	QUANTITY
F/A-18E/F – FRS	1312 1322 ATC 8341 AT1 8341 AT2 8341 AT3 8841 ATAN 8841	65 31 2 6 9 10 15

(1) Aircrew. It is expected that Navy F/A-18E/F squadrons will have either aircraft with the AN/APG-73 radar installed or aircraft with the AN/APG-79 AESA radar. Pilots and WSOs may have, to some degree, a training requirement to operate both systems. The deployment of the AESA Radar system is not expected to significantly add to operator tasks nor is it expected to generate any additional operator manpower requirements.

(2) Maintenance. Maintenance of the AESA will be performed by currently assigned ATs holding either NEC 8841 or 8341. As with the aircrew, maintenance technicians will be required to have training on both the AN/APG-73 and the AN/APG-79 AESA systems. As stated earlier, the deployment of the AESA Radar system is not expected to generate any additional maintenance manpower requirements.

4. Training Concept. The AESA training program will consist of initial and follow-on training for both operator and maintenance personnel. The contractor, the Boeing Company, will provide system training to operators and maintainers until Navy Fleet Readiness Squadrons (FRS) and Naval Air Maintenance Training Units (NAMTRAU) become Ready for Training (RFT) for AN/APG-79 AESA-equipped F/A-18E/F systems.

Follow-on aircrew training will be conducted at the currently operational West Coast F/A-18E/F FRS, VFA-122 NAS Lemoore, and at the future East Coast F/A-18E/F FRS, VFA-174, NAS Oceana, Virginia. (VFA-174 activation is planned for October 2003, teaching the AN/APG-73).

Follow-on maintenance training will be conducted at MTU 1038 NAMTRAU Lemoore, where F/A-18E/F training is ongoing and at MTU 1039 NAMTRAU Oceana (anticipated RFT date is second quarter FY05).

For some period of time, it is expected that the AESA system will augment to some degree the existing F/A-18E/F radar system training requirements until the AN/APG-73 material is no longer taught.

HSI is integral to the training development process supporting the AESA Radar system. During the design of the AESA Radar system, Human Factors Engineers feed information into the LSA. This information is, in turn, used to develop a training solution that complements the

physical and conceptual fidelity requirements for both aircrew and maintenance. Details of the training solution will stem from the Maintenance Plan and supporting LSAR, which are guided by HSI principals and related processes. The Maintenance Plan and LSAR are being developed by Raytheon for Boeing and are incomplete at this time. Information regarding training for the AESA, however limited, that has been made available at this time is included in this NTSP where deemed relevant.

The training system's representation of the battlespace situation, response of the warfare system in the battlespace, and physical/conceptual fidelity are all considered and weighed by knowledgeable experts in their field for the development of training and training materials. Media development will utilize existing F/A-18E/F curriculum standards and conventions. For further information contact PMA205.

AESA training is planned to use state of the art technology contained in a Visual Environment Maintenance Trainer (VEMT). The VEMT consists of an Instructor Station, Smart boards, and AESA mockup. It also provides for instructor malfunction insertion and fault isolation by the student. Students will be able to access IETMS and remove and replace components electronically. The AESA mockup will provide for physical hardware training. The VEMT, coupled with the analysis of the maintenance plan, is expected to satisfy necessary training while exploiting human factor considerations.

a. Initial Training. Initial training is being developed for delivery to two separate student groups, those involved in DT/OT (referred to as "Cadre I") and fleet users (referred to as "Cadre II").

(1) Cadre I. In support of DT/OT, which began in March 2003, the contractor has developed initial AESA operator and maintainer training to support Navy Test and Evaluation aircrew and maintenance personnel (Cadre I) stationed at VX-9 and at VX-31 China Lake. Aircrew training will be conducted at Boeing's flight simulator at its St. Louis, Missouri, facility, while maintenance training will be conducted by Boeing at VX-9 and VX-31.

(2) Cadre II. The contractor will also develop and conduct Cadre II initial training for FRS Instructors, NAMTRAU Instructors, and an initial cadre of Fleet personnel. The training for Navy FRS aircrews will reflect the new operating procedures, features, functions, and aircraft integration characteristics of the AESA. Cadre II training is currently planned to begin in April 2005.

b. Follow-on Training. Following-on training will consist of both aircrew training (to be conducted at the FRS) and maintenance training (to be conducted by the NAMTRAU). It is anticipated that operator and maintenance training will be similar to the existing AN/APG-73 training with curriculum, maintenance trainers, and simulators modified to reflect AESA requirements. The maintenance curriculum will utilize Maintenance Trainer Sets (MTS), CBT, and actual aircraft to convey the learning objectives. The AESA operator and maintenance curricula will be delivered by Boeing in digital format for integration into existing F/A-18E/F courses prior to the planned Ready for Training (RFT) date in second quarter FY05.

The Navy will have a mixed fleet of aircraft equipped with both AN/APG-73 and AN/APG-79 AESA Radar and, therefore, training must support both systems.

Information below showing Navy aircrew training Course Identification Numbers (CINs) assigned for the F/A-18E/F Pilot and WSO training pipelines is taken from the OPNAV Aviation Training Management System (OATMS), the Catalog of Navy Training Courses (CANTRAC), the Navy Training Management and Planning System (NTMPS) and the F/A-18 Aircraft NTSP. In the case of some F/A-18E/F-specific aircrew training pipeline or pipeline component courses, CINs may not have been assigned. These aircrew courses will use existing F/A-18 courseware that has modified to contain F/A-18E/F-related training, including that for the AESA system. As this information changes and further details become available, it will be included in updates to this document.

It is assumed that all aircrew and maintainer training track course identification will continue to follow the Pipeline/Component Course format with one or more component courses (FRS Squadron/MTU Indoctrination, Safety, etc.) assigned to each track or "pipeline." For simplicity, all courses in this document are organized in this manner (and not necessarily as found in OATMS or CANTRAC).

All current and planned organic Navy training tracks are shown in this document having CINs beginning with a geographic designator. Tracks taught on the East Coast at either the FRS (future) or the NAMTRAU at Oceana, will have CINs beginning with a "D" while those taught on the West Coast at either the FRS or the NAMTRAU at Lemoore will have CINs beginning with an "E." Training track course information provided in Part I of this document provides a single track description for both East and West coast locations (for example, "D/E-2A-062X" means the information applies to both D-2A-062X and to E-2A-062X) as it is assumed that the training pipeline developed for one location will mirror the other.

Technology investments enable the development of several state-of-the-art training and administrative tools: Interactive Multimedia Instruction (IMI) for the technicians in the Fleet in the form of Interactive Courseware (ICW), with Computer Managed Instruction (CMI), and Computer Aided Instruction (CAI) for the schoolhouse.

(1) F/A-18E/F Aircrew Training. The aircrew training syllabus will incorporate the use of Aircrew Simulators (Tactical Trainers), Computer-Based Training (CBT), and actual aircraft flights to ensure Pilot and Weapons Sensor Officer (WSO) proficiency. VFA-122 achieved RFT for F/A-18E/F Fleet Replacement Pilot Validation Training and WSO Validation Training in October 2000, and will require AESA-specific information added to the existing AN/APG-73-related material. The following pages document eight training courses (Pilot Categories 1-4 and WSO Categories 1-4) that are specifically for F/A-18E/F operator/aircrew.

Title ..... F/A-18E/F Fleet Replacement Pilot Category 1 Pipeline

CIN E-2A-061X

Model Manager....	VFA-122
Description.....	This pipeline provides training to the first tour F/A-18E/F Pilot, including: ° Flight Training ° Crew Tactics ° Crew Safety and Egression ° Communications and Navigation ° Armament Upon completion, the graduate will be able to perform the duties of an F/A-18E/F Pilot in a squadron environment.
Delivery Method..	CAI/ICW/Trainer/Simulator/Aircraft, etc. Will be updated as information becomes available.
Location	VFA-122, NAS Lemoore
Length	257 days
RFT date	Currently available at VFA-122 AESA will be added in second quarter FY05.
Skill identifier	1311
TTE/TD.....	° TD-01 Weapons Tactical Trainer (WTT) ° TD-02 Part Task Trainer (PTT) ° TD-03 Tactical Operational Flight Trainer (TOFT)
Prerequisite	° E-2A-0610, Survival, Evasion, Resistance, and Escape ° Designated Service Group I Naval Aviator ° Security Clearance – Secret

Title	**F/A-18E/F Fleet Replacement Pilot Category 2 Pipeline**
CIN	D/E-2A-062X
Model Manager....	VFA-122
Description.....	This pipeline provides training to the second tour F/A-18E/F Pilot, including: ° Flight Training ° Crew Tactics ° Crew Safety and Egression ° Communications and Navigation ° Armament Systems Upon completion, the graduate will be able to perform the duties of an F/A-18E/F Pilot in a squadron environment.

Delivery Method..	CAI/ICW/Trainer/Simulator/Aircraft, etc. Will be updated as information becomes available.
Locations	° VFA-122, NAS Lemoore ° VFA-174, NAS Oceana (October 2003)
Length.....	215 days
RFT date	Currently available at VFA-122 AESA will be added in second quarter FY05.
Skill identifier.....	1311
TTE/TD.....	° TD-01 WTT ° TD-02 PTT ° TD-03 TOFT
Prerequisite	° E-2A-0610, Survival, Evasion, Resistance, and Escape ° Designated Service Group I Naval Aviator ° Security Clearance - Secret

Title	**F/A-18E/F Fleet Replacement Pilot Category 3 Pipeline**
CIN	D/E-2A-063X
Model Manager....	VFA-122
Description.....	This pipeline provides advanced training to the F/A-18E/F Pilot, including: ° Flight Training ° Crew Tactics ° Crew Safety and Egression ° Communications and Navigation ° Armament Systems Upon completion, the graduate will be able to perform the duties of an F/A-18E/F Pilot in a squadron environment.
Delivery Method..	CAI/ICW/Trainer/Simulator/Aircraft, etc. Will be updated as information becomes available.
Locations	° VFA-122, NAS Lemoore ° VFA-174, NAS Oceana (October 2003)
Length.....	169 days
RFT date	Currently available at VFA-122 AESA will be added in second quarter FY05.
Skill identifier.....	1311

TTE/TD.....	° TD-01 WTT ° TD-02 PTT ° TD-03 TOFT
Prerequisite	° E-2A-0610, Survival, Evasion, Resistance, and Escape ° Designated Service Group I Naval Aviator ° Security Clearance - Secret

Title	**F/A-18E/F Fleet Replacement Pilot Category 4 Pipeline**
CIN	D/E-2A-064X
Model Manager....	VFA-122
Description.....	This pipeline provides training to the senior F/A-18E/F Pilot, including: ° Flight Training ° Crew Tactics ° Crew Safety and Egression ° Communications and Navigation ° Armament Systems Upon completion, the graduate will be able to perform the duties of an F/A-18E/F Pilot and of a Naval Aviation Training and Operating Procedures Standardization (NATOPS) Instructor in a squadron environment.
Delivery Method..	CAI/ICW/Trainer/Simulator/Aircraft, etc. Will be updated as information becomes available.
Locations	° VFA-122, NAS Lemoore ° VFA-174, NAS Oceana (October 2003)
Length.....	36 days
RFT date	Currently available at VFA-122 AESA will be added in second quarter FY05.
Skill identifier.....	1311
TTE/TD.....	° TD-01 WTT ° TD-02 PTT ° TD-03 TOFT
Prerequisite	° E-2A-0610, Survival, Evasion, Resistance, and Escape ° Designated Service Group I Naval Aviator ° Security Clearance - Secret

Title	**F/A-18E/F Combat Capable Weapons Sensor Officer Category 1 Pipeline**
CIN	D/E-2D-181X
Model Manager....	VFA-122
Description.....	This pipeline provides training to the first tour F/A-18E/F WSO, including: ° Flight Training ° Crew Tactics ° Crew Safety and Egression ° Communications and Navigation ° Armament Systems Upon completion, the graduate will be able to perform the duties of an F/A-18E/F WSO in a squadron environment.
Delivery Method..	CAI/ICW/Trainer/Simulator/Aircraft, etc. Will be updated as information becomes available.
Locations	° VFA-122, NAS Lemoore ° VFA-174, NAS Oceana (October 2003)
Length.....	259 days
RFT date	Currently available at VFA-122 AESA will be added in second quarter FY05.
Skill identifier.....	1321
TTE/TD.....	° TD-01 WTT ° TD-02 PTT ° TD-03 TOFT
Prerequisite	° E-2A-0610, Survival, Evasion, Resistance, and Escape ° Designated Service Group I Naval Aviator ° Security Clearance - Secret

Title	**F/A-18E/F Combat Capable Weapons Sensor Officer Category 2 Pipeline**
CIN	D/E-2D-182X
Model Manager....	VFA-122
Description.....	This pipeline provides training to the second tour F/A-18E/F WSO, including: ° Flight Training ° Crew Tactics ° Crew Safety and Egression ° Communications and Navigation ° Armament Systems Upon completion, the graduate will be able to perform the duties of an F/A-18E/F WSO in a squadron environment.
Delivery Method..	CAI/ICW/Trainer/Simulator/Aircraft, etc. Will be updated as information becomes available.
Locations	° VFA-122, NAS Lemoore ° VFA-174, NAS Oceana (October 2003)
Length.....	238 days
RFT date	Currently available at VFA-122 AESA will be added in second quarter FY05.
Skill identifier.....	1321
TTE/TD.....	° TD-01 WTT ° TD-02 PTT ° TD-03 TOFT
Prerequisite	° E-2A-0610, Survival, Evasion, Resistance, and Escape ° Designated Service Group I Naval Aviator ° Security Clearance - Secret

Title	**F/A-18E/F Combat Capable Weapons Sensor Officer Category 3 Pipeline**
CIN	D/E-2D-183X
Model Manager....	VFA-122
Description.....	This pipeline provides advanced training to the F/A-18E/F WSO, including: ° Flight Training ° Crew Tactics ° Crew Safety and Egression ° Communications and Navigation ° Armament Systems Upon completion, the graduate will be able to perform the duties of an F/A-18E/F WSO in a squadron environment.
Delivery Method..	CAI/ICW/Trainer/Simulator/Aircraft, etc. Will be updated as information becomes available.
Locations	° VFA-122, NAS Lemoore ° VFA-174, NAS Oceana (October 2003)
Length.....	154 days (estimate)
RFT date	Currently available at VFA-122 AESA will be added in second quarter FY05.
Skill identifier.....	1321
TTE/TD.....	° TD-01 WTT ° TD-02 PTT ° TD-03 TOFT
Prerequisite	° E-2A-0610, Survival, Evasion, Resistance, and Escape ° Designated Service Group I Naval Aviator ° Security Clearance - Secret

Title	**F/A-18E/F Combat Capable Weapons Sensor Officer Category 4 Pipeline**
CIN	D/E-2D-184X
Model Manager....	VFA-122
Description.....	This pipeline provides training for the senior F/A-18E/F WSO, including: ° Flight Training ° Crew Tactics ° Crew safety and egression ° Communications and Navigation ° Armament Systems Upon completion, the graduate will be able to perform the duties of an F/A-18E/F WSO and of a NATOPS Instructor in a squadron environment.
Delivery Method..	CAI/ICW/Trainer/Simulator/Aircraft, etc. Will be updated as information becomes available.
Locations	° VFA-122, NAS Lemoore ° VFA-174, NAS Oceana (October 2003)
Length.....	28 days (estimate)
RFT date	Currently available at VFA-122 AESA will be added in second quarter FY05.
Skill identifier.....	1321
TTE/TD.....	° TD-01 WTT ° TD-02 PTT ° TD-03 TOFT
Prerequisite.....	° E-2A-0610, Survival, Evasion, Resistance, and Escape ° Designated Service Group I Naval Aviator ° Security Clearance - Secret

(2) Maintenance Training. Organizational level maintenance training is taught at "C" Schools that provide separate *Initial* and *Career* training courses. *Initial* "C" School training is intended for entry-level students in paygrades E-4 and below. *Career* "C" School training is provided to organizational-level personnel, E-5 and above, to enhance skills and knowledge within their field. At this time, intermediate maintenance training is not planned for AESA.

The following courses had been developed specifically for organizational level F/A-18E/F maintainers. Baseline information is derived from course descriptions included

in the F/A-18 Aircraft NTSP, except for the Avionics Differences Data course, described below, which is not included in that document. Since the fleet will have both AN/APG-73 Radar and AN/APG-79 Radar-equipped aircraft to maintain, these courses will be modified to incorporate AN/APG-79 specific training.

Title	**F/A-18E/F Avionics Systems Difference Data Pipeline**
CIN	D/E-102-0625
Model Manager....	MTU 1038 NAMTRAU Lemoore
Description.....	This pipeline provides training to the second tour Aviation Electronics Technician, including: ° Aircraft Familiarization ° Avionics Familiarization ° Multipurpose Display Group (MDG) ° Tactical Air Moving Map Capability ° Maintenance Data Reporting System ° Publications and Safety Procedures Upon completion, the graduate will be able to perform organizational maintenance on the F/A-18E/F avionics systems in a squadron environment under limited supervision.
Delivery Method..	CAI/ICW/Trainer/Aircraft, etc. Will be updated as information becomes available.
Locations	° MTU 1038 NAMTRAU Lemoore ° MTU 1039 NAMTRAU Oceana (future)
Length.....	39 days
RFT date	Currently available at MTU 1038 AESA will be added in second quarter FY05.
Skill identifier.....	AT 8341 (E-5 through E-7)
TTE/TD.....	° TD-05 Avionics MTS ° F/A-18E/F Avionics Systems
Prerequisite.....	° NEC 8842 or 8342 ° SECRET Clearance

Title	**F/A-18E/F Avionics Systems (Initial) Organizational Maintenance Pipeline**
CIN	D/E-102-0623
Model Manager....	MTU 1038 NAMTRAU Lemoore
Description.....	This pipeline includes component course *C-102-9977, F/A-18E/F Avionics System (Initial) Organizational Maintenance Course*, and provides training to the first tour Aviation Electronics Technician, including: ° Communications and Navigation Systems ° Identification System ° MDG, Tactical ° Mission Computer, Flight Incident Recorder and Monitoring System (FIRAMS) and Deployable Flight Incident Recording Set (DFIRS) ° Integrated Defensive Electronic Countermeasures (IDECM) ° Sensor Systems ° Stores Management System ° Fire Control Systems and Weapons Release System Test ° Test and Support Equipment ° Publications and Safety Procedures ° F/A-18 Wire and Connector Repair Upon completion, the graduate will be able to perform entry-level organizational maintenance on the F/A-18E/F avionics systems in a squadron environment under direct supervision.
Delivery Method..	**Important Note:** The following is based on the December 2002 TCCD for C-102-9977 covering the existing radar (APG-73) portion of training only. ° Classroom: 16 hours theory in classroom 4 hours classroom review/progress test ° Trainer: 12 hours practical application in lab ° Aircraft: 0 hours ° Total: 32 hours **Note:** CAI/ICW portion of classroom training is unknown.
Locations	° MTU 1038 NAMTRAU Lemoore ° MTU 1039 NAMTRAU Oceana (future)

Length.....	CANTRAC: 103 days **Note:** OATMS: reflects only 81 days
RFT date	Currently available at MTU 1038 AESA will be added in second quarter FY05.
Skill identifier.....	AT 8841 (E-1 through E-4)
TTE/TD.....	° TD-05 Avionics MTS ° F/A-18E/F Avionics Systems
Prerequisite.....	° SECRET Clearance ° C-100-2020, Avionics Common Core Class A1 ° C-100-2018, Avionics Technician O-Level Class A1

Title	**F/A-18E/F Avionics Systems (Career) Organizational Maintenance Pipeline**
CIN	D/E-102-0624
Model Manager....	MTU 1038 NAMTRAU Lemoore
Description.....	This pipeline includes component course *CIN C-102-9978, F/A-18E/F Avionics System (Initial) Organizational Maintenance Course*, and provides training to the second tour Aviation Electronics Technician, including: ° Fire Control Systems ° Communications and Navigation Systems ° Identification System ° Countermeasure System ° Test and Support Equipment ° Publications and Safety Procedures Upon completion, the graduate will be able to perform organizational maintenance on the F/A-18E/F avionics systems in a squadron environment under limited supervision.
Delivery Method..	**Important Note:** The following is based on the December 2002 TCCD for C-102-9978 covering the existing radar (APG-73) portion of training only. ° Classroom: 12 hours theory in classroom ° Trainer: 2 hours practical application in lab ° Aircraft: 0 hours ° Total: 14 hours **Note:** CAI/ICW portion of classroom training is unknown.

Locations	° MTU 1038 NAMTRAU Lemoore ° MTU 1039 NAMTRAU Oceana (future)
Length	CANTRAC: 52 days **Note:** OATMS: reflects only 39 days
RFT date	Currently available at MTU 1038 AESA will be added in second quarter FY05.
Skill identifier	AT 8341 (E-5 through E-7)
TTE/TD.....	° TD-05 Avionics MTS ° F/A-18E/F Avionics Systems
Prerequisite	° SECRET Clearance ° E-102-0623, F/A-18E/F Avionics Systems (Initial) Organizational Maintenance ° C-100-2020, Avionics Common Core Class A1 ° C-100-2018, Avionics Technician O-Level Class A1

c. Student Profiles

SKILL IDENTIFIER	PREREQUISITE SKILL AND KNOWLEDGE REQUIREMENTS
1311	° Q-2A-0007, T-45 Strike Flight Training ° Q-2A-0005, Intermediate Strike Flight Training ° Q-2A-0006, Advanced Strike Flight Training ° E-2D-0032, Survival, Evasion, Resistance, and Escape Training ° J-495-0413, Shipboard Aircraft Firefighting
1321	° E-2D-0032, Survival, Evasion, Resistance, and Escape Training ° Designated Service Group I Naval Aviator
AT 8841	° C-100-2020, Avionics Common Core Class A1 ° C-100-2018, Avionics Technician O-Level Class A1
AT 8341	° C-100-2020, Avionics Common Core Class A1 ° C-100-2018, Avionics Technician O-Level Class A1 ° D/E-102-0623, F/A-18E/F Avionic Systems (Initial) Organizational Maintenance Pipeline

d. Training Pipelines. F/A-18E/F Pilot and WSO training tracks and component courses are still being developed. In both instances, formal CINs may not yet be assigned to the

course, and temporary ones are provided in this document. No new maintenance training pipeline courses will be developed; however, AESA-specific information will be incorporated into the existing F/A-18E/F maintenance training tracks.

I. ONBOARD (IN-SERVICE) TRAINING

1. Proficiency or Other Training Organic to the New Development

a. Maintenance Training Improvement Program. Current planning is to adopt the Aviation Maintenance Training Continuum System (AMTCS) concepts to replace the Maintenance Training Improvement Program (MTIP).

b. Aviation Maintenance Training Continuum System. AMTCS will provide career path training to the Sailor or Marine from their initial service entry to the end of their military career. AMTCS concepts will provide an integrated system that will satisfy the training and administrative requirements of both the individual and the organization. The benefits will be manifested in the increase effectiveness of the technicians and the increased efficiencies of the management of the training business process. Where appropriate, capitalizing on technological advances and integrating systems and processes can provide the right amount of training at the right time, thus meeting the CNO's mandated "just-in-time" training approach.

As mentioned earlier, technology investments enable the development of several state-of-the-art training and administrative tools: IMI for the technicians in the Fleet in the form of ICW, with CMI and CAI for the schoolhouse.

Included in the AMTCS development effort is the Aviation Maintenance Training Continuum System - Software Module, which provides testing [Test and Evaluation], recording [Electronic Certification Qualification Records], and a Feedback system. The core functionality of these AMTCS tools are based and designed around the actual maintenance-related tasks the technicians perform, and the tasks are stored and maintained in a Master Task List (MTL) data bank. These tools are procured and fielded with appropriate Commercial-Off-The-Shelf (COTS) hardware and software; i.e., Fleet Training Devices (FTDs) - laptop computers, desktop Personal Computers (PCs), Electronic Classrooms (ECRs), Learning Resource Centers (LRCs), operating software, and network software and hardware.

Upon receipt of direction from OPNAV (N789H), AMTCS concepts are to be implemented and the new tools integrated into the daily training environment of all participating aviation activities and supporting elements. AMTCS will serve as the standard training system for aviation maintenance training within the Navy and Marine Corps, and is planned to supersede the existing MTIP and Maintenance Training Management and Evaluation Program (MATMEP) programs.

2. Personnel Qualification Standards. This section will be updated in future revisions of this NTSP as information becomes available.

3. Other Onboard or In-Service Training Packages. This section will be updated in future revisions of this NTSP as information becomes available.

J. LOGISTICS SUPPORT

1. Manufacturer and Contract Numbers

CONTRACT NUMBER	MANUFACTURER	ADDRESS
N0019-01-C-0074	Raytheon Company	2000 East El Segundo Boulevard P.O. Box 902 El Segundo, CA 90245-0902

2. Program Documentation. The following program documentation applies:

- The Acquisition Logistics Support Plan Draft (dated April 30, 2003) has been distributed and applies to all phases of the AESA system.
- The Operational Requirements Document (ORD) unclassified portion was approved and distributed. The classified ORD 568-58-00 was signed 13 November 2000.
- The Test and Evaluation Master Plan (TEMP) 0201-07 was approved 16 January 2001.
- The Integrated Support Plan (ISP) N00019-01-C-0074 dated April 2001 has been distributed.

3. Technical Data Plan. All technical data will be in sufficient detail to supplement existing maintenance manuals and will be procured during the System Development and Demonstration phase of the Defense Acquisition System (DAS). Digital format technical manuals will be provided for support of IOC. They will include detailed instructions for items such as system installation and checkout procedures, operating and maintenance instructions, and inspection and troubleshooting procedures.

Publications will be in the form of Interactive Electronic Technical Manuals (IETMs) running on a Portable Electronic Display Devices (PEDD), which is currently a ruggedized laptop computer that is integrated with the F/A-18 Automated Maintenance Environment (AME) concept. According to the ORD, the management and acquiring of technical data shall be in compliance with Continuous Acquisition and Life Cycle Support (CALS) standards (OPNVAVINST 4120.5 is the current CALS document). However, at this time there is no current directive with regards to CALS. There is a Navy Policy for Digital Logistics Technical Data that can be found on the website http://navycals.dt.navy.mil/. For more information on

CALS, contact Naval Surface Warfare Center, Carderock Division (NSWCCD). Technical data will allow maximum on-site maintenance by providing the data needed to accomplish troubleshooting, fault isolation, and repairs authorized for each level of maintenance.

In the AME, the F/A-18E/F will monitor the status of critical aircraft systems in flight and store the data, including BIT and structural and engine sensor data, on a removable Memory Unit. After each flight, the aircrew will remove the Memory Unit from the aircraft for use in maintenance debriefs and engine diagnostics. A Data Acquisition System strips this post-flight data by retrieving it from the memory module and then storing it on a server where it will be used to generate maintenance actions. An expert system analyzes aircraft fault data, determines what failures have occurred and what maintenance actions should be performed, reducing dependence on human observation. The Pilot has the option of adding information not identified by BIT. Once this debrief session is complete, the system automatically initiates electronic work orders within the maintenance management system (CM Module). The CM module is the core of the AME and provides comprehensive equipment configuration management, maintenance planning, and tracking as well as the electronic maintenance logset required to do the job. The system encompasses aircraft components and support equipment, as well as support for parts life tracking and digital logsets. Critical information that is readily available includes: scheduled maintenance tasks, maintenance histories, Airworthiness Directives, and Service Bulletin status.

According to the (Draft 08) Concept of Operations (CONOPS) for the Automated Maintenance Environment, dated July 2002:

The IETM provides maintainers easy access to 80% of the information traditionally authored into paper technical manuals. It improves upon paper technical manuals by using information obtained from the Pilot and other observables such as BIT data, allowing the Work Center application to drill down through the IETM to the step in an applicable procedure. It provides step-by-step instructions to complete each maintenance action including the supporting maintenance actions such as application of power and use of testing/support equipment. The IETM allows these details and others associated with a task to be accessed as needed, through optional links. The use of summary and detailed steps allow the maintainer use the IETM at his/her own level of understanding and achieve the same result. The data is filtered based on the aircraft configuration, which means the maintainer will only see information specific to the task at hand.

As the maintenance procedure is followed, the IETM captures the maintenance actions as well as part and serial number information. If the maintainer detects a deficiency in the maintenance procedure, the IETM processing allows the maintainer to produce a Bookmark with comments for entry into the Technical Publication Deficiency Report (TPDR) process. The TPDR process improves the quality of the IETM and follows a complete review and sign-off process by Quality Assurance. Approved changes are included in the quarterly IETM database releases. By using electronic transfers and signoffs, the cycle time that the maintainer sees a change to the Technical Publications has been greatly reduced. Additionally, the labor-intensive distribution and updating of paper revisions has been eliminated.

In addition to the core IETM Viewer tool, there are other add-on tools to support maintenance operations. These include the Memory Inspection Table Viewer, Wiring Illuminator for digital wiring diagrams, and the embedded External Structural Damage Evaluation tool. These can be accessed seamlessly depending upon the need or availability of supporting data. Debrief, Memory Inspect, Help Request (TPDR), and the Wiring Illuminator can be accessed separately via the AME menu.

When the maintainer completes a Job, the IETM passes corrective action data to the Workcenter modules as part of the PEDD upload process. Workcenter, in turn, will pass "action taken data" and "replacement part information" to the CM module to complete the work order and update the historical records and aircraft configuration with minimal data entry.

In addition to the ease of use and reduction in time spent doing data entry, the quality of the data collected is improved significantly, offering a rich repository for life cycle analysis. The maintenance history captured in the CM module now includes detailed information, tracked against each serialized component, that is complete and consistent. When a part is transferred, the history is transferred with it making it available from a central repository for anyone with a need to know.

From this discussion of the AME, it is important to recognize that a certain quantity and quality of technical data are required for AESA system supportability, such as drawings, parts placement diagrams, and test requirements, etc. Currently, the technical data the OEM is willing to provide is reportedly not useable for IETMs or training development.

4. Test Sets, Tools, and Test Equipment. Special tools and test equipment will be minimized wherever feasible. The AESA is designed to minimize requirements for Common and Peculiar Support Equipment to the maximum extent; however, it will be necessary to have some new items Support Equipment (SE) to support Radome and Array removal at the organizational level in order to prevent injury to maintenance personnel or damage to the antenna.

Some AESA peculiar support equipment is needed for the AN/APG-79, even though normally the AN/APG-73 radar antenna is manually lifted during removal and installation. At 165 pounds, the AN/APG-79 AESA Antenna weighs more than the AN/APG-73 Antenna. AESA Antenna removal and replacement procedures will required the use of common tools already available to the activity (work-stand, bomb hoist, wrenches, ratchets, sockets, screwdrivers, etc.) as well as a special AESA Antenna array cover, lifting collar, hoist beam, and antenna carrying case. Although it may be possible to replace an antenna when the radome is not totally removed but only extended forward (approximately 32 inches) on support equipment, analysis has shown that with the radome completely removed, there is less likelihood of damage during maintenance. Close maintenance crew coordination is required to safely lift and lower the antenna with the hoist to prevent damage, with one person operating the hoist while two others guide the antenna from either side of the nose of the aircraft.

The Radar Radome Removal Fixture is shown in Figure I-3 below. Prototype assets will be used until the design is complete and documentation reviewed prior to beginning

procurement. The Radome Removal Fixture is being designed with built-in adaptability and flexibility to make it handle a number of tasks, rather than require separate SE for each task. Four sets of this Special SE, one for each FRS and each MTU, will also be required for training purposes. Each site will also require an Antenna Cover, Antenna Collar, Hoist Beam, and Antenna Carrying Case (see Figures I-3 through I-8).

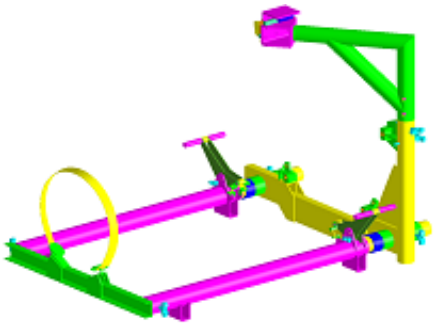

Figure I-3. Prototype Radar Radome Removal Fixture

The AESA Radar will have the capability to be boresighted (i.e., aligning the longitudinal axis of the radar with that of the aircraft) using current F/A-18E/F AN/APG-73 boresight equipment or automatically (without the use of external boresight equipment).

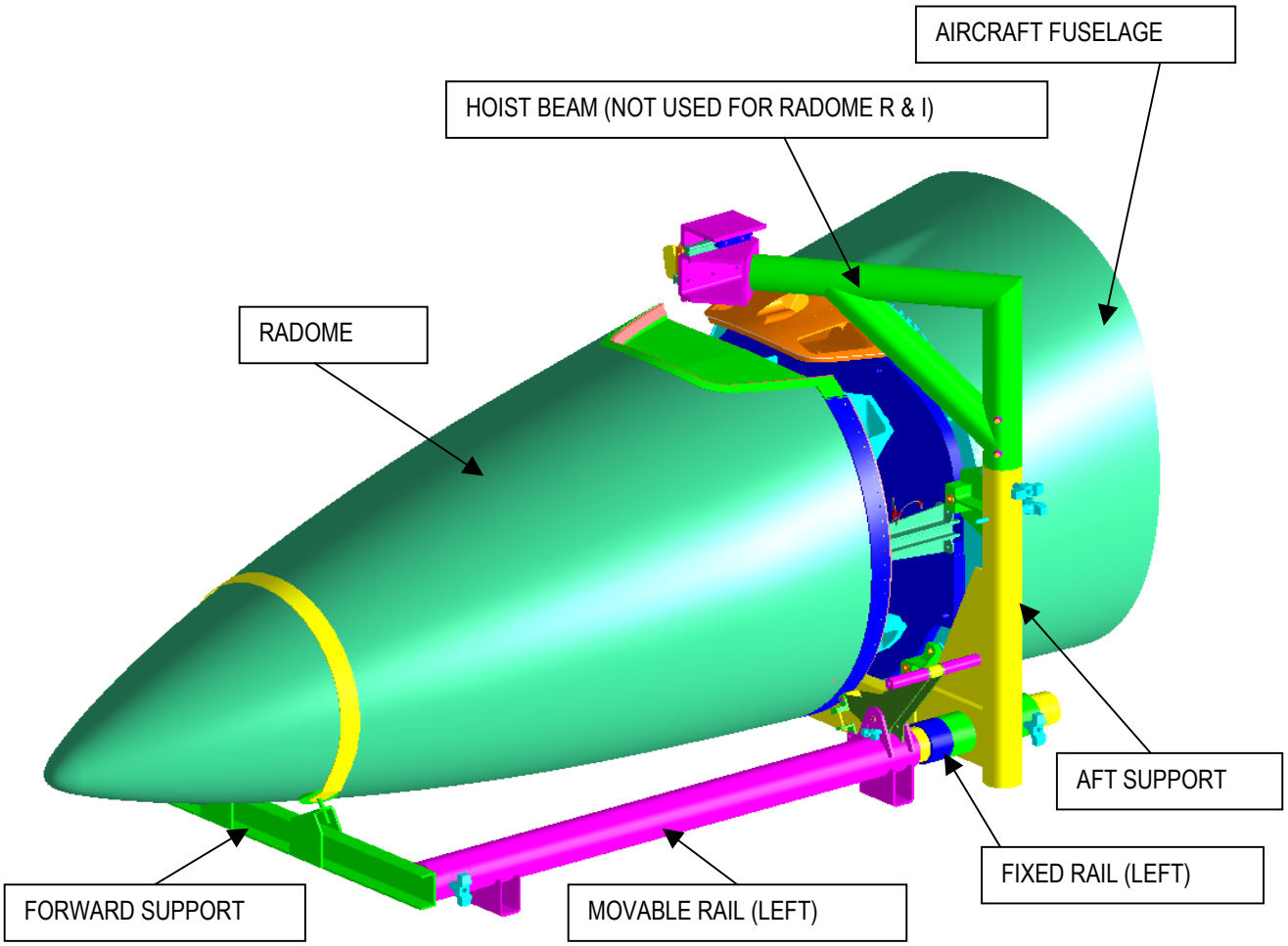

Figure I-4. AESA Radome Removal Fixture in Place

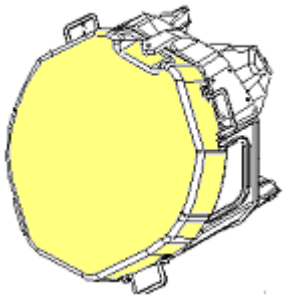

Figure I-5. AESA Antenna Array Cover and Lifting Collar

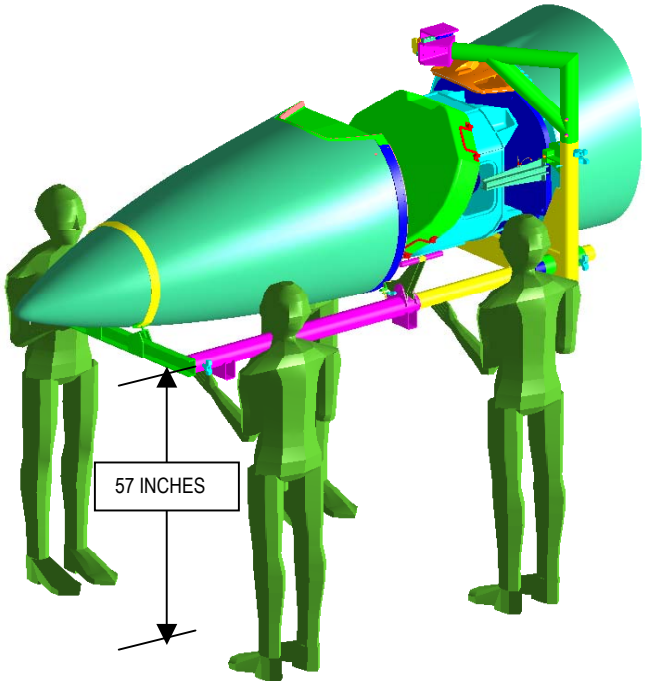

Figure I-6. Radome Removal

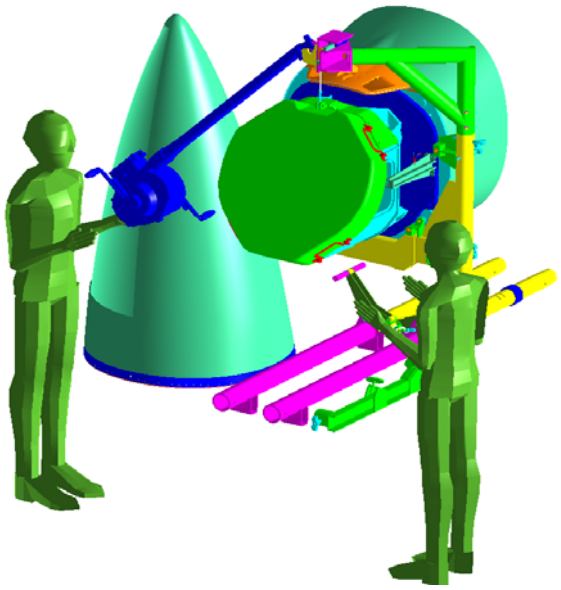

Figure I-7. Antenna Removal

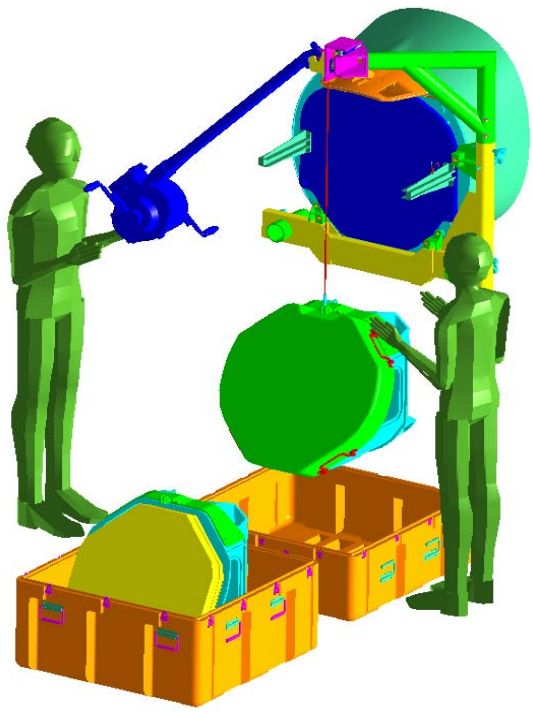

Figure I-8. Lifting the Replacement Antenna

Note: The radar antenna can be handled, removed, and installed by three persons when a hoist is being used. One person uses the hoist while the other two, one on each side, guide the antenna while it is being hoisted up or down. Manually moving an antenna when stored in half of the carrying case may require more people because the total weight of antenna plus half of the carrying case is estimated to be 261 pounds, while the weight of the antenna enclosed in a full case is estimated to be 318 pounds.

5. Repair Parts. A spares management effort will be undertaken to control analysis, acquisition, delivery, documentation, and repair activities for AESA Radar where applicable. Replacement parts will be provisioned by the NAVICP item managers and the OEM. The Material Support Date (MSD) for AESA is planned for late 2007.

Fielding the acquired system requires that certain spares be procured to support the program while the system configuration is being established. An interim spares inventory and budget have been identified for procurement; however, the interim spares are not yet on contract.

6. Human Systems Integration. The Program Manager is required by Deputy Secretary of Defense Memorandum (DSD Memo), Defense Acquisition Process, 30 October 2002, Attachment 2, Operation of the Defense Acquisition System, to have a comprehensive

strategy for Human Systems Integration "in place early in the acquisition process to minimize ownership costs and improve performance by ensuring that the system is built to accommodate the human performance characteristics of the user population that will operate, maintain and support the system".

The various aspects of Human System Integration are often referred to in different ways, but must take into account the following system areas: Human Factors Engineering, Manpower, Personnel, Training, Environment, Safety and Health, Habitability, and Survivability. These HSI elements are focused on enabling, enhancing, supporting and maintaining required levels of human performance capability in systems. In order to accomplish this there must be a synergistic mutual interrelationship between among all of the HSI elements that extends from system conceptual development through detailed design. The trade-off decisions made by the Weapon System Program Manager have a direct impact on how the training will be designed, how many people are required and what NECs/MOSs are affected. Manpower, Personnel, and Training are the three HSI elements that will ALWAYS bear the burden of a weak system design. It is, therefore, imperative that these impacts are reflected in the design, implementation, and evaluation of the total training system. The AESA acquisition program has taken each of these into consideration as follows:

a. Human Factors Engineering. Government/Contractor Integrated Program Teams (IPT) or contract deliverables ensure that human factors engineering/cognitive engineering is employed through Systems Engineering for the life of the project to provide for effective human-machine interfaces and to meet HSI requirements.

Human Factors Engineering analysis has been conducted in support of the AN/APG-79 AESA program by the Human Factors Task Team of the NAVAIR China Lake and Human Factors Engineering specialists at The Boeing Company, St. Louis. Results are documented in the report "Active Electronic Steered Array (AESA) Radar Critical Task and Information Analysis." An excerpt from the Introduction to this report demonstrates that human factors considerations were integrated into the design of the system from the earliest stages of development. In part, it states:

> "Frequently new weapon systems or upgrades to existing systems are integrated to Navy aircraft without fully evaluating how and when the system will be utilized within the mission context. Failure to consider the mission and the collateral tasking can result in a control and display mechanization which is difficult to accomplish, or which provides too much, too little, or the wrong information to the aircrew.
>
> A Critical Task and Information Analysis applied to a representative mission provides a aircrew-performing-a-mission oriented view of the integrated aircraft. This approach identifies the aircrew's needs, then provides guidance to designers to support those needs."

The report documents an analysis done in support of integration of the Active Electronic Scanned Array (AESA) Radar onto the F/A-18E/F. The study was initiated at the direction of the first meeting of the Concept Analysis Group (CAG) (later re-identified as the Design Analysis Group (DAG)), the group of Pilots and Weapon System Officers (WSOs) providing design

guidance to the Navy, Boeing Company, and Raytheon Company Integrated Product Team. The study was performed by the Human Factors Task Team of the NAVAIR China Lake and Human Factors Engineering specialists at The Boeing Company, St. Louis.

An essential part of the study was the significant participation of the DAG members who provide a review board who, as user experts, provide dynamic human-machine interface analysis and product suitability quality control throughout the various phases of system design, development, test and evaluation, and deployment. These DAGS can vary in number and size - AESA had five DAGS with between 12 and 15 Pilots in each DAG, due to the extensive amount of tactical scenarios that had to be studied. DAGS are held as the system progresses through EMD, OT, and beyond and Pilot feedback is continual for the life of the system. DAGS review the functionality of the prototype, help with revising the simulations, agree on acceptable design before a contract is let, and even after contract award continue to look at the system. Hornet Tactics Advisory Teams (HTATs) are essentially Pilot Review Boards, which continually examine functionality against tactics performed, etc. The HTAT has a running "wish list" which they prioritize when discussing desired changes/improvements with the developer.

The report contains implications for AESA design as well as issues and concerns for several mission phases. No training concerns were identified in the study. A copy of the report is available from the F/A-18 Crew Systems Coordinator, NAVAIR 4.6.4.

b. Manpower. The F/A-18E/F AN/APG-79 AESA Radar will be phased into the Navy's tactical active forces over a seven-year span. The recipient tactical squadrons will provide front line, forward-deployed defense through enhanced fighter coverage. There are two distinct types of deployed squadrons. The F/A-18E squadrons will have a Primary Assigned Aircraft (PAA) of 12 single-seat aircraft. The F/A-18E/F squadrons will have a PAA of 14 two-seat aircraft. The current plan is to have two training squadrons, VFA-122 on the West Coast and VFA-XXX on the East Coast, which will ensure adequately trained aircrew and maintenance personnel are available to operate the F/A-19E/F. The AN/APG-79 Radar System will be phased into F/A-18E/F production aircraft beginning in FY05. The aircraft transition schedule is outlined in Part I, and detailed organizational billet information is presented in Part II of the NTSP.

The AESA system will perform its functions within existing operator and maintainer manpower skill levels and occupational specialties. All maintenance and operational training will be kept within existing skill identifier requirements.

The manpower requirements for fielding and maintaining the AESA system were calculated by AIR 3.4.1 at NAVAIR Patuxent River using standardized manpower estimation techniques and processes, along with coordination with the Naval Manpower Analysis Center (NAVMAC) and the Naval Personnel Command (NPC) Bureau of Naval Personnel (BUPERS). Findings are reported in the Manpower Estimate Report (MER) titled Manpower Estimate for the F/A-E/F AESA Radar System dated August 2000. In the report, the Support Concept section states "support manpower requirements will not exceed those of the baseline F/A-E/F program."

c. Personnel. The human performance characteristics of the AESA user population are defined by the Program Manager and the personnel community based on the system description,

projected characteristics of target occupational specialties, and recruitment and retention trends. To the maximum extent possible, systems do not require special cognitive, physical, or sensory skills beyond those found in the specified user population. For any skill requirements that exceed the knowledge, skills, and abilities of current military occupational specialties or that may require additional skill indicators or hard-to-fill military occupational specialties, the Program Manager will consult with personnel communities to identify readiness, PERSTEMPO, and funding issues that impact program execution.

The MER determined that the AN/APG-79 AESA Radar system user community is the very same community as that currently utilizes the AN/APG-73 Radar system, and no new manpower requirements will be generated by the fielding of the AN/APG-79 AESA Radar system. For more information, contact AIR 3.4.1.

d. Training. To ensure that a well-defined training program is available for the AN/APG-79 Radar, a systematic approach to training will be applied by implementing the Instructional Systems Development (ISD) concept. ISD defines the total AN/APG-79 Radar training requirements in terms of learning objectives. The training requirement is satisfied through and instructional system, which is designed as the most cost efficient combination of resources, techniques, and procedures by which the specific learning objectives may be achieved.

In order to ensure that human performance requirements and objectives influence design, efforts to provide effective human performance, involving both training development and design, must be initiated early in system development. Throughout the system design, development and modification processes, the identification and analysis of training requirements must parallel the development of design concepts since they are both directed at the same objective, that of producing effective, responsive and proficient human performance.

AESA radar courseware is being developed to support aircrew and maintenance training. The aircrew training syllabus will incorporate the use of Aircrew Simulators (Tactical Trainers), Computer-Based Training (CBT) that will be conformant with the technical standards to run in the intended environment: classroom, automated electronic classroom, learning resource center, Navy e-learning, AMTCS, or desktop (NMCI ashore or IT21 afloat), and actual aircraft flights to ensure proficient Pilots and WSOs. The maintenance curriculum will utilize Maintenance Trainer Sets, CBT, and actual aircraft to convey the learning objectives. AESA maintenance training will conform to the CNO's directive for initial and career training.

Details on development of training courseware requirements and solutions are pending the awarding of a training contract to Boeing by the Navy. According to PMA205:

> "The Training Concept is dictated by an approved LSA (Maintenance Plan) which is being developed by Raytheon for delivery to Boeing and has not been completed". . . [and] . . . "the type and amount of curriculum content will be based on contracted analysis of the maintenance plan with consideration given to existing courseware and design strategies when the curriculum is procured."

"After Boeing is placed on contract to develop training, Boeing Training Systems will utilized its Subject Matter Experts (SMEs) and Instructional Designers (IDs) to determine Learning and Enabling Objectives, Test Questions, Instructor Guides, Student Guides, and Graphics to envelop and cover the AESA Subject. Phrases such as:

- Delivery method
- Training media
- Training fidelity
- Concordance between training situation and actual system
- Association between training and design
- Expertise in following procedures
- Degree of physical fidelity
- Agreement between physical human interfaces in training situation and the system
- Expertise on cognitive capabilities
- Decision making
- Diagnosis
- Maintaining situation awareness
- Integration of information from numerous sources
- Conceptual fidelity rather than physical to be maximized
- Training system's representation of the battlespace situation
- Response of the warfare system in the battlespace
- Physical/conceptual fidelity

are all considered and weighed by knowledgeable experts in their field of Training for the development of Training Materials and Training. Training Personnel will utilize the developed LSA as it influences the development of technical publications, i.e., IETMs (Interactive Electronic Technical Manuals), which are used as a basis to determine what needs to be taught. Human Factors Engineers, during the design of the AESA Radar system, feed information into the LSA. This information is, in turn, used to develop a trainer and training that complements physical and conceptual fidelity requirements for both aircrew and maintenance."

Modifications to training materials and trainers will ensure that training scenarios accurately reflect what the operator or maintenance technician will be presented with in the fleet. Training Equipment Change Requests (TECRs) and ECPs will be utilized to keep training systems current. Again, according to PMA205:

"It is expected that AESA Radar modifications/ upgrades will be achieved via ECP. PMA205 receives advance copies of ECPs and provides same to appropriate SMEs to assess application to trainers/training and associated costs. TECR evaluation would follow the same process. Upon determination of trainer / training impact the appropriate agency is contracted to develop the required product(s) utilizing the ISD system which considers human factors as one of the

elements. Distribution of training products is defined by CDRL (Contract Data Requirements List) and evaluated by the Fleet users during periodic reviews prior to final delivery and acceptance."

Trade-offs that reduce manpower and training requirements will be favored during design and development. A final manpower and training determination that identifies ways to reduce potential critical errors and poor maintenance procedures by organizational level personnel, and that is consistent with safe operation and maintenance at forward deployed bases and aboard aircraft carriers, will be documented and validated in revisions to the existing F/A-18E/F Naval Training System Plan, N88-NTSP-A-50-7703I/D.

The Department of Defense (DoD) established the Advanced Distributed Learning (ADL) initiative in 1997 to develop a DoD-wide strategy for using learning and information technologies to modernize education and training and to promote cooperation between government, academia, and business to develop e-learning standardization.

The ADL initiative has defined high-level requirements for learning content, such as content reusability, accessibility, durability and interoperability to leverage existing practices, promote the use of technology-based learning, and provide a sound economic basis for investment.

All CAI and ICW (CBT) are to be Sharable Content Object Reference Model (SCORM) conformant as per Executive Order 13111 guidance. The DoD Handbook Glossary for Training (MIL-HDBK-29612-4) defines a Sharable Content Object (SCO) as "Self-contained pieces of instructional material that can be individually selected from a repository for reuse as a building block of instruction during training and education development", and SCORM as "software that defines the interrelationship of course components, data models, and protocols such that content "objects" are shareable across systems that conform with the same model accommodating reuse and repurposing."

More information concerning the design of training systems and training systems components can be located at the Defense Training Standards Working Group's website at http://www.dtswg.org from reference documents there which include:

DOCUMENT	TITLE
MIL-PRF-29612B	A Performance Specification for Training Data Products
DI-SESS-81517B	Training Situation Document (31 August 2001)
DI-SESS-81518B	Instructional Performance Requirements Document (31 August 2001)
DI-SESS-81519B	Instructional Media Requirements Document (31 August 2001)
DI-SESS-81520B	Instructional Media Design Package (31 August 2001)
DI-SESS-81521B	Training Program Structure Document (31 August 2001)
DI-SESS-81522B	Course Conduct Information Package (31 August 2001)
DI-SESS-81523B	Training Conduct Support Document (31 August 2001)
DI-SESS-81524B	Training Evaluation Document (31 August 2001)
DI-SESS-81525B	Test Package (31 August 2001)
DI-SESS-81526B	Instructional Media Package (31 August 2001)
DI-SESS-81527B	Training System Support Document (31 August 2001)
MIL-HDBK-29612-1A	Guidance for Acquisition of Training Data Products and Services (31 August 2001)
MIL-HDBK-29612-2A	Instructional Systems Development/Systems Approach to Training and Education (31 August 2001)
MIL-HDBK-29612-3A	Development of Interactive Multimedia Instruction (IMI) (31 August 2001)
MIL-HDBK-29612-4A	Glossary for Training (31 August 2001)
MIL-HDBK-29612-5	Advanced Distributed Learning (ADL) Products and Systems (31 August 2001)

For more information regarding the development of AESA radar courseware, CBT, or other elements of training system design, contact PMA205.

e. Environment, Safety, and Occupational Health. As part of risk reduction, the PM will prevent ESOH hazards, where possible, and will manage ESOH hazards where they cannot be avoided. The support strategy will contain a summary of the Programmatic ESOH Evaluation (PESHE) document, including ESOH risks, a strategy for integrating ESOH considerations into the systems engineering process, identification of ESOH responsibilities, a method for tracking progress, and compliance schedule for National Environmental Policy Act (NEPA) [excerpt from DSD Memo, Defense Acquisition Process, 30 October, 2001, Attachment 2, Tab G.]. During system design, hazardous materials used in the system are identified and plans are made for their demilitarization and disposal.

The Executive Summary of the January 2003 Draft PMA265 PESHE for the F/A-18E/F AN/APG-79 Radar reads in part:

> PMA 265 has prepared the AN/APG-79 Radar PESHE to evaluate the program's status and strategy with respect to the six tenets of the DSD Memo, Defense Acquisition Process, 30 October 2002. These tents are ESOH Compliance, National Environmental Policy Act (NEPA), System Safety and Health (including system safety, personal safety and occupational health, and explosives safety), HAZMAT Management/Pollution Prevention (P2). Each discipline was reviewed in the following acquisition life cycle phases: Manufacture, Test and Evaluation, Deployment/Maintenance, and Demilitarization/Disposal. PMA265 then developed an overarching acquisition strategy for the F/A-18 Program. The implementation strategy is directly related to the Program's acquisition schedule.
>
> The goal of the F/A-18E/F Active Electronically Scanned Array (AN/APG-79) Radar Environment, Safety, and Occupational Health (ESOH) integration initiative is to identify ESOH risks, develop a strategy for integrating ESOH consideration into the systems engineering process, delineate ESOH responsibilities, and provide a method for tracking progress. ESOH issues than cannot be eliminated will be mitigated to the extent possible while assuring the success of the weapons system.
>
> Based on this evaluation, the overall ESOH risk for the AN/APG-79 Radar Program is considered Acceptable with Review and is illustrated in Figure 1-1. The findings that support this evaluation are summarized in Figure 1-2.

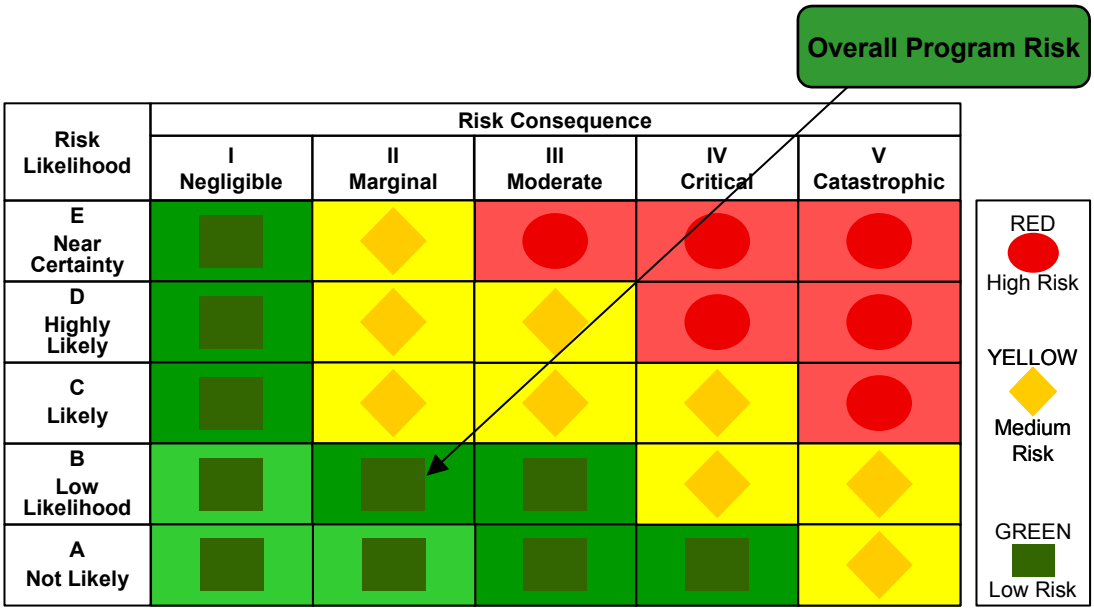

Figure 1-1: Program ESOH Risk

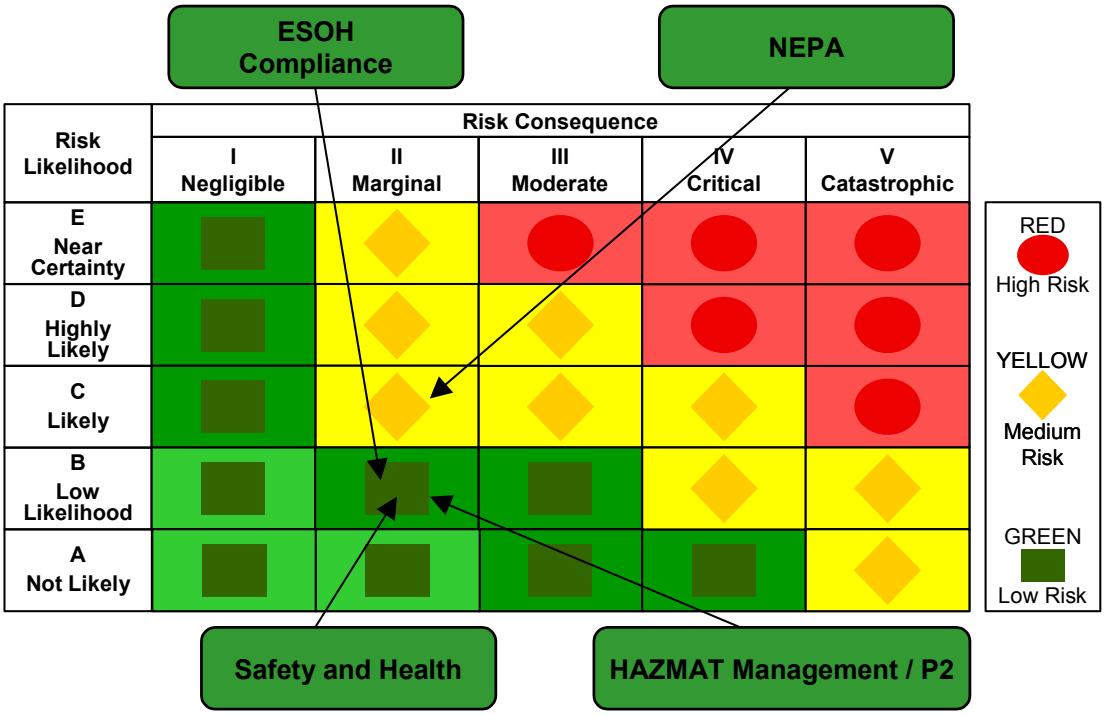

Figure 1-2: Program ESOH Risk by Discipline

Table ES-1: Summary of ESOH Findings

ESOH DISCIPLINE	FINDINGS
NEPA	◦ A draft Environmental Impact Statement (EIS) for East Coast deployment of the aircraft was released to the public for comment on August 12, 2002. The Record of Decision reflecting the Navy's decision on East Coast basing location(s) is currently planned for July 2002. The AN/APG-79 Radar will replace the legacy system and is not anticipated to result in any significant change to aircraft operations and thereby, no significant environmental impacts are anticipated with deploying the AN/APG-79. PMA265 will provide technical data about the AN/APG-79 Radar, as necessary to the Fleet for their use in determining whether or not NEPA is invoked by deployment and training requirements. ◦ Depot/OEM Level maintenance is being considered; however, sites have not yet been determined. ◦ Follow-on Operational Test and Evaluation will require additional NEPA evaluation. ◦ A NEPA and/or Executive Order (EO) 12114 review will be conducted once demilitarization/disposal requirements have been defined for the AN/APG-79 Radar.
Compliance	◦ Compliance issues of the radar cannot be fully assessed until the East Coast deployment location of the F/A-18E/F Aircraft is selected. ◦ Compliance issues associated with the demilitarization/disposal of the radar cannot be assessed until the requirements are defined. ◦ Future environmental initiatives must continue to be monitored for compliance impacts in all phases of the acquisition program (i.e., potential impacts from Occupational Safety and Health Administration reduction of permissible exposure levels to hexavalent chromium in the workplace; a change in the Environmental Protection Agency pretreatment standards for chromium; and an EO requiring additional reporting requirements and chemical reduction goals). ◦ International compliance issues will be evaluated based on technical specification data to identify risk associated with overseas deployment of the weapons system to support Fleet NEPA activities.

ESOH DISCIPLINE	FINDINGS
Safety and Occupational Health	◦ Few issues exist for System Safety. Currently, there are medium to low risk hazards tracked by the System Safety Working Group. ◦ Few issues exist with regard to Occupational Safety and Health. ◦ Safety issues regarding the demilitarization/disposal of the aircraft cannot be assessed until the requirements for the AN/APG-79 radar are determined. ◦ There are no explosives associated with the AN/APG-79 Radar Program.
HAZMAT Management / Pollution Prevention	◦ PMA265 has completed implementation of a full life cycle Hazardous Material (HAZMAT) Program that includes consideration and implementation of Pollution Prevention (P2) initiatives. Data and reports generated by the AN/APG-79 Radar System are included in this PMA265 HAZMAT Program. ◦ Raytheon Common Avionics (ComAv) Programs have a HAZMAT and P2 Program and will provide data to Boeing as required. ◦ Marion Composites does not have a formal HMMP but will use Boeing's program. ◦ The HAZMAT and P2 posture of the radar cannot be assessed until the East Coast site for the F/A-18E/F Aircraft site is selected. ◦ Until the demilitarization/disposal requirements are finalized for the AN/APG-79 Radar Program, the HAZMAT and P2 posture of the radar cannot be assessed.

And finally, also from the January 2003 Draft PMA265 PESHE for the F/A-18E/F AN/APG-79 Radar):

> Specific areas of improvement have resulted from a concentrated effort by PMA265 and the Green Hornet Team to develop automated tools to collect and store vital workflow data down to the lowest production levels. The F/A-18 Hazardous Material (HAZMAT) Database, which serves as a central repository for all hazardous materials used in production, deployment/maintenance and disposal of the F/A-18 aircraft, allows ready access to material usage data and provides a tool for identifying and assessing program risk and environmental life-cycle cost drivers. The AN/APG-79 Radar and associated Hazardous Material Reports generated by contractors during production have been included in the overall F/A-18 HAZMAT database and will serve to minimize costs associated with updating the ESOH Strategy.

The following NEPA schedule has been prepared and represents the NEPA requirements associated with development and support of the AN/APG-79 Radar System. PMA265 and the Green Hornet Team will evaluate NEPA requirements and perform NEPA documentation associated with Production, Test and Evaluation of the Radar system. It is, however, the responsibility of the Fleet to evaluate NEPA requirements and perform documentation associated with deployment and maintenance of the Radar System. PMA265 and members of the Green Hornet Team will continue to support and provide required aircraft specification and ESOH related data to the Fleet to support these requirements.

Program Phase	Location	Schedule Begin/End	Responsible Proponent	Initial Analysis	Secondary Analysis	Result
Manufacture	Boeing, St Louis	March 2000	PMA265	Site Survey	CATEX	Memo to File
Manufacture	Raytheon, El Segundo	March 2000	PMA265	Site Survey	CATEX	Memo to File
Testing	NAVAIR China Lake	June 2003	PMA265	Site Survey	TBD	TBD
Testing	NAS Patuxent River	January 2005	PMA265	Site Survey	TBD	TBD
Basing	NAS Lemoore	January 2005	Fleet	Site Survey	TBD	TBD
Basing	East Coast Site	January 2005	Fleet	Site Survey	TBD	TBD
Maintenance	OEM	January 2005	PMA265	Site Survey	TBD	TBD
Disposal	Site TBD	Future Date TBD	Fleet	Site Survey	TBD	TBD

Program Recognition for Environmental Excellence. The AN/APG-79 AESA Radar system environmental program was given specific mention in the FY2001 Chief of Naval Operations Environmental Security Awards presented to the F/A-18E/F Acquisition Program in the award category: "Environmental Excellence in Weapon System Acquisition Team." PMA265's environmental IPT, known as the Green Hornet Team (GHT), provides a multi-disciplinary and interactive group to advise the F/A-18 Program Manager on initiatives to minimize environmental impact on F/A-18 acquisition and operations. The GHT defines solutions to environmental issues with respect to F/A-18 manufacture, test and evaluation (T&E), Integrated Logistics Support (ILS), maintenance, operations, training, and eventual disposition of the aircraft at the end of its useful life. A single instance of the many successful ESOH initiatives cited was for the AESA Radar, which eliminated Aluminum-Beryllium alloy from its initial design resulting in both safety and monetary benefits. Reduced Aluminum-Beryllium alloy production, disposal, and maintenance cost savings amounted to $4,000.00 per unit, or $1.1 million for the program. The F/A-18E/F design specification limits Beryllium to no more than 2% of any alloy to minimize occupational safety concerns.

f. Habitability. Habitability refers to requirements for the physical environment (e.g., medical and mess) and living conditions (e.g., berthing and personal hygiene) for conditions

that have a direct impact on meeting or sustaining system performance or that have such an adverse impact on quality of life and morale that recruitment or retentions is degraded. The AN/APG-79 AESA system creates no new requirements in this regard, thus habitability considerations do not apply.

g. Survivability. For systems with missions that might expose the aircraft and crew to combat threats, personnel survivability issues are being addressed, including: protection against fratricide, detection, and instantaneous, cumulative, and residual nuclear, biological, and chemical effects; the integrity of the crew compartment; and provisions for rapid egress when the system is severely damaged or destroyed. The Program Manager will provide for special equipment or gear, if needed, to sustain crew operations in the operational environment.

The AN/APG-79 AESA Radar system poses no additional exposure to risk to crew or aircraft that has not already been addressed in the design of the aircraft's egress, electronic countermeasures, and other survivability systems.

K. SCHEDULES

1. Installation and Delivery Schedules

INSTALLATION SCHEDULE (NUMBER OF AIRCRAFT)

F/A-18 MODEL – ACTIVITY/LOCATION	LOT	DELIVERY START	FY01	FY02	FY03	FY04	FY05	FY06	FY07	FY08
[E/F] VFA-122 (FRS) Lemoore	-	-		-						
[E] VFA-115 Lemoore CVW-14	23	Jan 01	12							
[F] VFA-14 Lemoore CVW-11	24	Dec 01		12						
[F] VFA-41Lemoore CVW-11	24	Dec 01		14						
[F] VFA-102 Lemoore CVW-9	23/24	May 02		14 [2]						
[E] VFA-137 Lemoore CVW-2	25	Jun 03			12					
[F] VFA-2 Lemoore CVW-2	25	Jun 03			12					
[E/F] VFA-174 (FRS) Oceana	TBD	Oct 03				TBD				
[E] VFA-22 Lemoore CVW-8	26	Dec 03				12 [3]				
[E] VFA-27 Japan CVW-5	26	May 04				13				

F/A-18 MODEL – ACTIVITY/LOCATION	LOT	DELIVERY START	FY01	FY02	FY03	FY04	FY05	FY06	FY07	FY08
[F] VFA-154 Lemoore CVW-9	23/4	May 04				12				
[E] VFA-81 East CVW-17	27	Mar 05					12			
[F] VFA-103 East CVW-17	27	Mar 05					12			
[F] VFA-32 East CVW-3	27 [1]	Aug 05					12			
[F] VFA-213 East CVW-8	28	Jan 06						12		
[E] VFA-86 East CVW-1	28	Jul 06						12		
[F] VFA-211 East CVW-1	28	Jul 06						12		
[F] VFA-11 East CVW-7	29	Dec 06							12	
[F] VFA-143 East CVW-7	29	Dec 06							12	
[F] VFA-31 Lemoore CVW-14	29	May 07							12	
[E] VFA-105 East CVW-3	30	Nov 07								12
[E] VFA-146 Lemoore CVW-9	30	Jul 08								12

Note 1: AESA incorporation is scheduled to begin with Lot 27 aircraft planned for delivery to VFA-32 in August 2005.

Note 2: VFA-102 will exchange its Lot 23/24 aircraft for Lot 26 aircraft prior to moving to Japan.

Note 3. VFA-22 will remain at NAS Lemoore until NAS Oceana is ready to accept the F/A-18E/F, at which time VFA-22 will PCS to NAS Oceana.

2. Ready For Operational Use Schedule. For each activity the Ready For Operational Use (RFOU) date will coincide with the delivery of the first aircraft to the squadron. Refer to the table above in paragraph K.1. for delivery schedules.

3. Time Required to Install at Operational Sites. After the delivery of the first aircraft to the receiving activity, it will take an estimated four to six months before the ninth aircraft is delivered.

4. Foreign Military Sales and Other Source Delivery Schedule. The following countries may have requirements for the AESA equipped F/A-18E/F Aircraft: Australia, Kuwait, Netherlands, Singapore, and the United Kingdom. No specific schedules exist at this time.

5. Training Device and Technical Training Equipment Delivery Schedule. PMA205 plans to upgrade the Aircrew Simulators (Tactical Trainers) and the MTS trainers so that they may be evaluated during OPEVAL, scheduled for FY06. Realistic training is required for F/A-18E/F operators and maintainers on both the AN/APG-73 and AN/APG-79 AESA systems.

a. Aircrew Trainers. The Tactical Trainers required for F/A-18 aircrew training are already delivered, but will be upgraded to incorporate AN/APG-79 AESA functionality at both the Lemoore and Oceana F/A-18E/F training sites. The schedule for upgrading those devices is shown below.

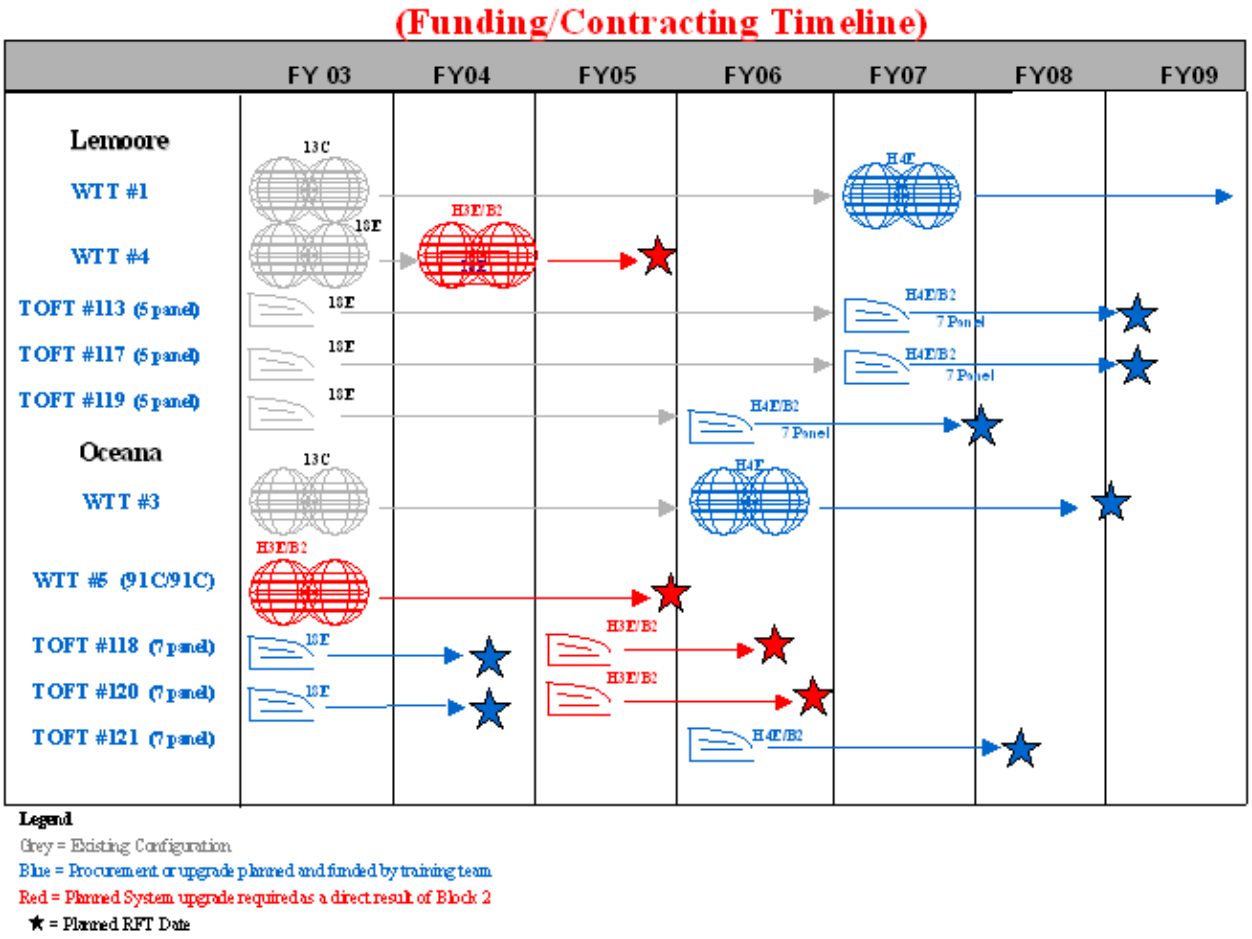

b. Maintenance Trainers. The majority of AESA related training will be conducted in the NAMTRAU utilizing the avionics portion of the F/A-18E/F Maintenance Training Set or MTS. MTSs will utilize the most effective portions of the existing Naval Air

Maintenance Trainers (NAMT) and Simulated Aircraft Maintenance Trainers (SAMT) and will be upgraded to the latest AESA configuration. The MTS will have computer control capability and provide fault insertion features.

Virtual Environment Maintenance Trainers (VEMT) are being contracted for by PMA205. These Avionics / ECS system VEMT provide hands-on mockups to support Block 2 equipment maintenance training. VEMTs are not yet documented in Part IV of this NTSP and will be when information becomes available. For further information, contact PMA205.

ATFLIR Mockup
Not part of Block II
Upgrade Plan

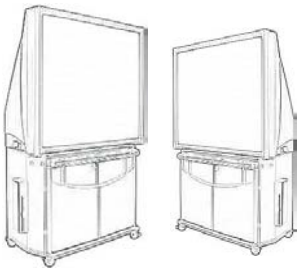

SmartBoard ©
Display System

Instructor / Operator
Station

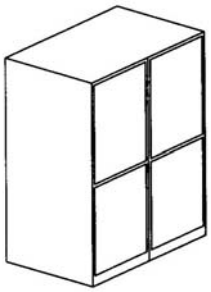

Cockpit Equipment
Station

AESA Mockup

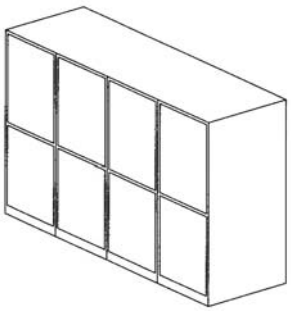

Trainer
Equipment
Station

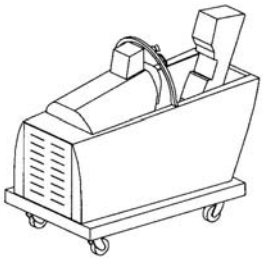

Cockpit Station

Proposed Virtual Environment Maintenance Trainer Components

L. GOVERNMENT-FURNISHED EQUIPMENT AND CONTRACTOR-FURNISHED EQUIPMENT TRAINING REQUIREMENTS. GFE and CFE requirements for Training Devices are contained in the detailed trainer specifications. Course Requirements are found in the applicable Equipment Requirements List.

M. RELATED NTSPs AND OTHER APPLICABLE DOCUMENTS

DOCUMENT OR NTSP TITLE	DOCUMENT OR NTSP NUMBER	PDA CODE	STATUS
Active Electronic Steered Array (AESA) Radar Critical Task and Information Analysis		Boeing	Oct 01
Active Electronically Scanned Array (APG-79) Radar System Mission Systems Operation And Function Description (MSOFD)	F/A–18E/F–311R–10328	Boeing	Rev. D Dec 02
Active Electronically Scanned Array (AESA) Acquisition Logistics Support Plan (ALSP) (Version 5 Draft)		NAVAIR PMA265	Draft Apr 03
AN/APG-79 Maintenance Plan (LSA-024 Report)	5180000-100	NAVAIR PMA265	Feb 03
AN/APG-79 AESA Test and Evaluation Master Plan	0201-07	NAVAIR PMA265	Approved Jan 01
APG-79 AESA Radar Subsystem Interface Control Document (ICD)	ICD-F/A-18E/F-056	Boeing	Rev A Mar 02
F/A-18 Aircraft Navy Training System Plan	N88-NTSP-A-50-7703I/D	NAVAIR PMA265	Draft Oct 02
F/A–18E/F AESA Radar AN/APG–79 Weapon System Performance Specification	AS–6195	NAVAIR PMA265	Nov 00
F/A-18E/F Block II System Upgrade, APG-79 Interface Control Document – Intermediate	ICD-F/A-18E/F-051	Boeing	May 00

DOCUMENT OR NTSP TITLE	DOCUMENT OR NTSP NUMBER	PDA CODE	STATUS
Integrated Support Plan	N00019-01-C-0074	NAVAIR PMA265	Initial Apr 01
Manpower Estimation for the F/A-18E/F AESA Radar System		AIR 3.4.1	Aug 00
PMA265 Programmatic Environment, Safety, and Occupational Health Evaluation (PESHE) for the F/A-18E/F AN/APG-79 RADAR		NAVAIR PMA265	Draft Jan 03
Single Acquisition Management Plan (SAMP) For the F/A-18E/F AN/APG-79 Active Electronically Scanned Array (AESA) RADAR		NAVAIR PMA265	Mar 03
Training Program Development and Management Plan, F/A-18E/F, Appendix A Training Situation Analysis	MDC 93B0304	Boeing	Oct 93

PART II - BILLET AND PERSONNEL REQUIREMENTS

The following elements are not affected by AN/APG-79 AESA Radar and, therefore, are not included in Part II of this NTSP:

II.A. Billet Requirements

II.A.2.a. Operational and Fleet Support Activity Deactivation Schedule

II.A.2.b. Billets to be Deleted in Operational and Fleet Support Activities

II.A.2.c. Total Billets to be Deleted in Operational and Fleet Support Activities

PART II - BILLET AND PERSONNEL REQUIREMENTS

II.A. BILLET REQUIREMENTS

SOURCE OF SCHEDULE:	NAVAIR 3.4.1: TFS	**DATE:**	April 2002
SOURCE OF MANPOWER:	TFMMS, NTMPS	**DATE:**	January 2003
SOURCE OF F/A-18E/F	TSPAT	**DATE:**	May 2002

II.A.1.a. OPERATIONAL AND FLEET SUPPORT ACTIVITY ACTIVATION SCHEDULE

ACTIVITY, UIC		PFYs	CFY03	FY04	FY05	FY06	FY07
OPERATIONAL ACTIVITIES - USN							
[E/F] VFA-174 (FRS) Oceana (Future)	65553	0	1	0	0	0	0
[E] VFA-105 East - CVW-3	65183	0	0	0	0	0	1
[E] VFA-81 East - CVW-17	09221	0	0	1	0	0	0
[E] VFA-86 East - CVW-1	09943	0	0	0	1	0	0
[F] VFA-103 East - CVW-17	09718	0	0	1	0	0	0
[F] VFA-11 East - CVW-7	09560	0	0	0	0	1	0
[F] VFA-143 East - CVW-7	09281	0	0	0	0	1	0
[F] VFA-211 East - CVW-1	09086	0	0	0	1	0	0
[F] VFA-213 East - CVW-8	09934	0	0	0	1	0	0
[F] VFA-32 East - CVW-3	09053	0	0	0	1	0	0
[E/F] VFA-122 (FRS) Lemoore [UIC 65558]	09355	1	0	0	0	0	0
[E] VFA-115 Lemoore - CVW-14	09604	1	0	0	0	0	0
[E] VFA-137 Lemoore - CVW-2	55142	1	0	0	0	0	0
[E] VFA-146 Lemoore CVW-9	09063	0	0	0	0	0	1
[E] VFA-22 Lemoore - CVW-8	09561	0	1	0	0	0	0
[E] VFA-27 Japan - CVW-5	65185	0	1	0	0	0	0
[F] VFA-102 Lemoore - CVW-9	09717	1	0	0	0	0	0
[F] VFA-14 Lemoore - CVW-11	09084	1	0	0	0	0	0
[F] VFA-154 Lemoore - CVW-9	09678	0	1	0	0	0	0
[F] VFA-2 Lemoore - CVW-2	09113	1	0	0	0	0	0
[F] VFA-31 Lemoore - CVW-14	09473	0	0	0	0	1	0
[F] VFA-41 Lemoore - CVW-11	09774	1	0	0	0	0	0
TOTAL:		7	4	2	4	3	2
FLEET SUPPORT ACTIVITIES - USN							
Naval Air Warfare Center AD Patuxent River	49860	1	0	0	0	0	0
VX-23 [Strike] Patuxent River	39783	1	0	0	0	0	0
COMSTRKFIGHTWINGPAC Lemoore	09520	1	0	0	0	0	0
STRKFIGHTWINGPAC	55257	1	0	0	0	0	0
VX-31 China Lake	39787	1	0	0	0	0	0
VX-31 NWCF China Lake	30649	1	0	0	0	0	0
VX-9 China Lake	55646	1	0	0	0	0	0
TOTAL:		7	0	0	0	0	0

Note 1: The "OPERATIONAL AND FLEET SUPPORT ACTIVITY ACTIVATION SCHEDULE" is actually a "TRANSITION" vice "ACTIVATION" schedule, showing the timeframe for squadrons transitioning to the F/A-18E/F airframe and hence all are shown as a VFA (vice VF) squadron.

II.A.1.a. OPERATIONAL AND FLEET SUPPORT ACTIVITY ACTIVATION SCHEDULE

Note 2: The AESA Radar will be installed initially in the last eight new production F/A-18E/F Aircraft of Lot 27 and then incrementally in successive production lots: 12 in Lot 28, 22 in Lot 29, and 48 in Lot 30, etc. Later, additional systems will be acquired for retrofit into squadron aircraft which were manufactured with the AESA predecessor, the AN/APG-73.

> **Important:** Beginning in the latter part of FY05, fleet squadrons (starting with Lot 27 equipped VFA-32) transitioning to the AN/APG-79-equipped F/A-18E/F will immediately require AESA-trained operators and maintainers, in addition to AN/APG-73-trained personnel. When production has sufficiently ramped up to provide squadrons with all AESA-equipped F/A-18E/F Aircraft, then the AN/APG-73 training requirement for personnel assigned to those activities will decrease (estimated FY08 or FY09).

Note 3: F/A-18E/F Aircraft radar systems maintenance manpower requirements include AT rating NECs 8841 (Initial) and 8341 (Career) and are projected in advance of F/A-18E/F deliveries and are expected to be reflected in future Activity Manpower Document (AMD) requirements.

Note 4: The use of the term "FY0X Increment" in the following sections does not indicate an increment in manpower requirements, but instead denotes the approximate timeframe of anticipated NEC conversions from existing F-14 or F/A-18A/B/C/D organizational level AT billets to F/A-18E/F organizational level AT billets.

Note 5: Manpower data is current, as of January 2003, for activities that are currently in transition or have finished transitioning to the F/A-18E/F Aircraft.

II.A.1.b. BILLETS REQUIRED FOR OPERATIONAL AND FLEET SUPPORT ACTIVITIES

ACTIVITY, UIC, PHASING INCREMENT	BILLETS OFF	BILLETS ENL	DESIG/ RATING	PNEC/ PMOS	SNEC/ SMOS
OPERATIONAL ACTIVITIES - USN					
[E/F] VFA-174 (FRS) Oceana (Future), 65553, FY03 Increment					
ACDU	65	0	1312		
	31	0	1322		
	0	2	ATC	8341	
	0	6	AT1	8341	
	0	9	AT2	8341	
	0	10	AT3	8841	
	0	15	ATAN	8841	
ACTIVITY TOTAL:	96	42			
[E] VFA-105 East - CVW-3, 65183, FY07 Increment					
ACDU	19	0	1311		
	0	1	ATC	8341	
	0	2	AT1	8341	
	0	1	AT1	8341	6701
	0	5	AT2	8341	
	0	5	AT3	8841	
	0	8	ATAN	8841	
ACTIVITY TOTAL:	19	22			
[E] VFA-81 East - CVW-17, 09221, FY04 Increment					
ACDU	19	0	1311		
	0	1	ATC	8341	
	0	2	AT1	8341	
	0	1	AT1	8341	6701
	0	5	AT2	8341	
	0	5	AT3	8841	
	0	8	ATAN	8841	
ACTIVITY TOTAL:	19	22			
[E] VFA-86 East - CVW-1, 09943, FY05 Increment					
ACDU	19	0	1311		
	0	1	ATC	8341	
	0	2	AT1	8341	
	0	1	AT1	8341	6701
	0	5	AT2	8341	
	0	5	AT3	8841	
	0	8	ATAN	8841	
ACTIVITY TOTAL:	19	22			

II.A.1.b. BILLETS REQUIRED FOR OPERATIONAL AND FLEET SUPPORT ACTIVITIES

ACTIVITY, UIC, PHASING INCREMENT	BILLETS OFF	BILLETS ENL	DESIG/ RATING	PNEC/ PMOS	SNEC/ SMOS
[F] VFA-103 East - CVW-17, 09718, FY04 Increment					
ACDU	20	0	1311		
	18	0	1321		
	0	1	ATC	8341	
	0	2	AT1	8341	
	0	1	AT1	8341	6701
	0	5	AT2	8341	
	0	5	AT3	8841	
	0	8	ATAN	8841	
ACTIVITY TOTAL:	38	22			
[F] VFA-11 East - CVW-7, 09560, FY06 Increment					
ACDU	20	0	1311		
	18	0	1321		
	0	1	ATC	8341	
	0	2	AT1	8341	
	0	1	AT1	8341	6701
	0	5	AT2	8341	
	0	5	AT3	8841	
	0	8	ATAN	8841	
ACTIVITY TOTAL:	38	22			
[F] VFA-143 East - CVW-7, 09281, FY06 Increment					
ACDU	20	0	1311		
	18	0	1321		
	0	1	ATC	8341	
	0	2	AT1	8341	
	0	1	AT1	8341	6701
	0	5	AT2	8341	
	0	5	AT3	8841	
	0	8	ATAN	8841	
ACTIVITY TOTAL:	38	22			
[F] VFA-211 East - CVW-1, 09086, FY05 Increment					
ACDU	20	0	1311		
	18	0	1321		
	0	1	ATC	8341	
	0	2	AT1	8341	
	0	1	AT1	8341	6701
	0	5	AT2	8341	
	0	5	AT3	8841	
	0	8	ATAN	8841	
ACTIVITY TOTAL:	38	22			

II.A.1.b. BILLETS REQUIRED FOR OPERATIONAL AND FLEET SUPPORT ACTIVITIES

ACTIVITY, UIC, PHASING INCREMENT	BILLETS OFF	BILLETS ENL	DESIG/ RATING	PNEC/ PMOS	SNEC/ SMOS
[F] VFA-213 East - CVW-8, 09934, FY05 Increment					
ACDU	20	0	1311		
	18	0	1321		
	0	1	ATC	8341	
	0	2	AT1	8341	
	0	1	AT1	8341	6701
	0	5	AT2	8341	
	0	5	AT3	8841	
	0	8	ATAN	8841	
ACTIVITY TOTAL:	38	22			
[F] VFA-32 East - CVW-3, 09053, FY05 Increment					
ACDU	20	0	1311		
	18	0	1321		
	0	1	ATC	8341	
	0	2	AT1	8341	
	0	1	AT1	8341	6701
	0	5	AT2	8341	
	0	5	AT3	8841	
	0	8	ATAN	8841	
ACTIVITY TOTAL:	38	22			
[E/F] VFA-122 (FRS) Lemoore [UIC 65558], 09355, FY01 Increment					
ACDU	65	0	1312		
	31	0	1322		
	0	2	ATC	8341	
	0	6	AT1	8341	
	0	9	AT2	8341	
	0	10	AT3	8841	
	0	15	ATAN	8841	
ACTIVITY TOTAL:	96	42			
[E] VFA-115 Lemoore - CVW-14, 09604					
ACDU	19	0	1311		
	0	1	ATC	8341	
	0	2	AT1	8341	
	0	1	AT1	8341	6701
	0	5	AT2	8341	
	0	5	AT3	8841	
	0	9	ATAN	8841	
ACTIVITY TOTAL:	19	23			

II.A.1.b. BILLETS REQUIRED FOR OPERATIONAL AND FLEET SUPPORT ACTIVITIES

ACTIVITY, UIC, PHASING INCREMENT	BILLETS OFF	BILLETS ENL	DESIG/ RATING	PNEC/ PMOS	SNEC/ SMOS
[E] VFA-137 Lemoore - CVW-2, 55142, FY02 Increment					
ACDU	19	0	1311		
	0	1	ATC	8341	
	0	2	AT1	8341	
	0	1	AT1	8341	6701
	0	5	AT2	8341	
	0	5	AT3	8841	
	0	6	ATAN	8841	
ACTIVITY TOTAL:	19	20			
[E] VFA-146 Lemoore CVW-9, 09063, FY07 Increment					
ACDU	19	0	1311		
	0	1	ATC	8341	
	0	2	AT1	8341	
	0	1	AT1	8341	6701
	0	5	AT2	8341	
	0	5	AT3	8841	
	0	9	ATAN	8841	
ACTIVITY TOTAL:	19	23			
[E] VFA-22 Lemoore - CVW-8, 09561, FY03 Increment					
ACDU	19	0	1311		
	0	1	ATC	8341	
	0	2	AT1	8341	
	0	1	AT1	8341	6701
	0	5	AT2	8341	
	0	5	AT3	8841	
	0	8	ATAN	8841	
ACTIVITY TOTAL:	19	22			
[E] VFA-27 Japan - CVW-5, 65185, FY03 Increment					
ACDU	19	0	1311		
	0	1	ATC	8341	
	0	2	AT1	8341	
	0	1	AT1	8341	6701
	0	5	AT2	8341	
	0	5	AT3	8841	
	0	9	ATAN	8841	
ACTIVITY TOTAL:	19	23			

II.A.1.b. BILLETS REQUIRED FOR OPERATIONAL AND FLEET SUPPORT ACTIVITIES

ACTIVITY, UIC, PHASING INCREMENT	BILLETS OFF	BILLETS ENL	DESIG/ RATING	PNEC/ PMOS	SNEC/ SMOS
[F] VFA-102 Lemoore - CVW-9, 09717, FY02 Increment					
ACDU	20	0	1311		
	18	0	1321		
	0	1	ATC	8341	
	0	2	AT1	8341	
	0	1	AT1	8341	6701
	0	5	AT2	8341	
	0	7	AT3	8841	
	0	7	ATAN	8841	
ACTIVITY TOTAL:	38	23			
[F] VFA-14 Lemoore - CVW-11, 09084, FY02 Increment					
ACDU	20	0	1311		
	18	0	1321		
	0	1	ATC	8341	
	0	2	AT1	8341	
	0	1	AT1	8341	6701
	0	5	AT2	8341	
	0	5	AT3	8841	
	0	8	ATAN	8841	
ACTIVITY TOTAL:	38	22			
[F] VFA-154 Lemoore - CVW-9, 09678, FY03 Increment					
ACDU	20	0	1311		
	18	0	1321		
	0	1	ATC	8341	
	0	2	AT1	8341	
	0	1	AT1	8341	6701
	0	5	AT2	8341	
	0	5	AT3	8841	
	0	8	ATAN	8841	
ACTIVITY TOTAL:	38	22			
[F] VFA-2 Lemoore - CVW-2, 09113, FY02 Increment					
ACDU	15	0	1311		
	25	0	1321		
	0	1	ATC	8341	
	0	2	AT1	8341	
	0	5	AT2	8341	
	0	7	AT3	8841	
	0	10	ATAN	8841	
ACTIVITY TOTAL:	40	25			

II.A.1.b. BILLETS REQUIRED FOR OPERATIONAL AND FLEET SUPPORT ACTIVITIES

ACTIVITY, UIC, PHASING INCREMENT	BILLETS OFF	BILLETS ENL	DESIG/ RATING	PNEC/ PMOS	SNEC/ SMOS
[F] VFA-31 Lemoore - CVW-14, 09473, FY06 Increment					
ACDU	20	0	1311		
	18	0	1321		
	0	1	ATC	8341	
	0	2	AT1	8341	
	0	1	AT1	8341	6701
	0	5	AT2	8341	
	0	5	AT3	8841	
	0	8	ATAN	8841	
ACTIVITY TOTAL:	38	22			
[F] VFA-41 Lemoore - CVW-11, 09774, FY02 Increment					
ACDU	20	0	1311		
	18	0	1321		
	0	1	ATC	8341	
	0	2	AT1	8341	
	0	1	AT1	8341	6701
	0	5	AT2	8341	
	0	7	AT3	8841	
	0	7	ATAN	8841	
ACTIVITY TOTAL:	38	23			
FLEET SUPPORT ACTIVITIES - USN					
VX-23 [Strike] Patuxent River, 39783, FY02 Increment					
ACDU	0	2	ATC	8341	
	0	7	AT1	8341	
	0	12	AT2	8341	
	0	5	AT3	8841	
	0	1	ATAN	8841	
ACTIVITY TOTAL:	0	27			
STRKFIGHTWINGPAC, 55257					
ACDU	0	1	AT1	8341	
	0	1	AT2	8341	
	0	1	AT3	8841	
	0	2	ATAN	8841	
ACTIVITY TOTAL:	0	5			

II.A.1.b. BILLETS REQUIRED FOR OPERATIONAL AND FLEET SUPPORT ACTIVITIES

ACTIVITY, UIC, PHASING INCREMENT	BILLETS OFF	BILLETS ENL	DESIG/ RATING	PNEC/ PMOS	SNEC/ SMOS
VX-31 China Lake, 39787					
ACDU	0	1	ATC	8341	
	0	3	AT1	8341	
	0	1	AT1	8341	8342
	0	3	AT2	8341	
	0	2	AT2	8341	8342
	0	7	AT3	8841	
	0	2	ATAN	8841	
	0	2	ATAN	8842	8841
ACTIVITY TOTAL:	0	21			
VX-31 NWCF China Lake, 30649, FY02 Increment					
ACDU	0	1	ATC	8341	8342
ACTIVITY TOTAL:	0	1			
VX-9 China Lake, 55646					
ACDU	0	3	AT2	8341	
	0	1	AT3	8841	
	0	1	ATAN	8841	
ACTIVITY TOTAL:	0	5			

II.A.1.c. TOTAL BILLETS REQUIRED FOR OPERATIONAL AND FLEET SUPPORT ACTIVITIES

DESIG/ RATING	PNEC/SNEC PMOS/SMOS		PFYs OFF	PFYs ENL	CFY03 OFF	CFY03 ENL	FY04 OFF	FY04 ENL	FY05 OFF	FY05 ENL	FY06 OFF	FY06 ENL	FY07 OFF	FY07 ENL
USN OPERATIONAL ACTIVITIES - ACDU														
1311			113		58		39		79		60		38	
1312			65		65		0		0		0		0	
1321			79		18		18		54		54		0	
1322			31		31		0		0		0		0	
ATC	8341			8		5		2		4		3		2
AT1	8341			18		12		4		8		6		4
AT1	8341	6701		5		3		2		4		3		2
AT2	8341			39		24		10		20		15		10
AT3	8841			46		25		10		20		15		10
ATAN	8841			62		40		16		32		24		17
USN FLEET SUPPORT ACTIVITIES - ACDU														
ATC	8341			3		0		0		0		0		0
ATC	8341	8342		1		0		0		0		0		0
AT1	8341			11		0		0		0		0		0
AT1	8341	8342		1		0		0		0		0		0
AT2	8341			19		0		0		0		0		0
AT2	8341	8342		2		0		0		0		0		0
AT3	8841			14		0		0		0		0		0
ATAN	8841			6		0		0		0		0		0
ATAN	8842	8841		2		0		0		0		0		0

SUMMARY TOTALS:

USN OPERATIONAL ACTIVITIES - ACDU														
			288	178	172	109	57	44	133	88	114	66	38	45
USN FLEET SUPPORT ACTIVITIES - ACDU														
				59		0		0		0		0		0

GRAND TOTALS:

USN - ACDU														
			288	237	172	109	57	44	133	88	114	66	38	45

II.A.3. TRAINING ACTIVITIES INSTRUCTOR AND SUPPORT BILLET REQUIREMENTS

DESIG RATING	PNEC/SNEC PMOS/SMOS		PFYs OFF	PFYs ENL	CFY03 OFF	CFY03 ENL	FY04 OFF	FY04 ENL	FY05 OFF	FY05 ENL	FY06 OFF	FY06 ENL	FY07 OFF	FY07 ENL
TRAINING ACTIVITY, LOCATION, UIC: MTU 1038 NAMTRAU Lemoore, 66060														
INSTRUCTOR BILLETS														
USN														
ATC	8341	9502	0	0	0	2	0	2	0	2	0	2	0	2
AT1	8341	9502	0	2	0	6	0	6	0	6	0	6	0	6
AT2	8341	9502	0	0	0	2	0	2	0	2	0	2	0	2
SUPPORT BILLETS														
USN														
ATC	8341		0	0	0	1	0	1	0	1	0	1	0	1
AT2	8341		0	0	0	1	0	1	0	1	0	1	0	1
TOTAL:			0	2	0	12	0	12	0	12	0	12	0	12
TRAINING ACTIVITY, LOCATION, UIC: MTU 1039 NAMTRAU Oceana, 66045														
INSTRUCTOR BILLETS														
USN														
AT1	8341	9502	0	10	0	9	0	9	0	9	0	9	0	9
AT2	8341	9502	0	1	0	6	0	6	0	6	0	6	0	6
SUPPORT BILLETS														
USN														
AT1	8341		0	0	0	1	0	1	0	1	0	1	0	1
TOTAL:			0	11	0	16	0	16	0	16	0	16	0	16

II.A.4. CHARGEABLE STUDENT BILLET REQUIREMENTS

ACTIVITY, LOCATION, UIC	USN/ USMC	PFYs OFF	PFYs ENL	CFY03 OFF	CFY03 ENL	FY04 OFF	FY04 ENL	FY05 OFF	FY05 ENL	FY06 OFF	FY06 ENL	FY07 OFF	FY07 ENL
MTU 1039 NAMTRAU, Oceana, 66045													
	USN	0.0	0.0	0.0	0.0	0.0	0.0	0.0	23.0	0.0	20.6	0.0	18.8
VFA-174 E/F FRS-East, NAS Oceana, 65553													
	USN	0.0	0.0	0.0	0.0	0.0	0.0	74.7	0.0	60.0	0.0	48.4	0.0
MTU 1038 NAMTRAU, Lemoore, 66060													
	USN	0.0	27.9	0.0	26.3	0.0	18.5	0.0	19.5	0.0	23.1	0.0	23.7
VFA-122 E/F FRS-West, NAS Lemoore, 09355													
	USN	0.0	0.0	0.0	0.0	124.9	0.0	151.2	0.0	156.0	0.0	139.5	0.0
SUMMARY TOTALS:													
	USN	0.0	27.9	0.0	26.3	124.9	18.5	225.9	42.5	216.0	43.7	187.9	42.5
GRAND TOTALS:													
		0.0	27.9	0.0	26.3	124.9	18.5	225.9	42.5	216.0	43.7	187.9	42.5

II.A.5. ANNUAL INCREMENTAL AND CUMULATIVE BILLETS

DESIG/ RATING	PNEC/ PMOS	SNEC/ SMOS	BILLET BASE	CFY03 +/-	CFY03 CUM	FY04 +/-	FY04 CUM	FY05 +/-	FY05 CUM	FY06 +/-	FY06 CUM	FY07 +/-	FY07 CUM
a. OFFICER - USN													
Operational Billets ACDU and TAR													
1311			113	58	171	39	210	79	289	60	349	38	387
1312			65	65	130	0	130	0	130	0	130	0	130
1321			79	18	97	18	115	54	169	54	223	0	223
1322			31	31	62	0	62	0	62	0	62	0	62
Chargeable Student Billets ACDU and TAR													
			0	0	0	125	125	101	226	-10	216	-28	188
TOTAL USN OFFICER BILLETS:													
Operational			288	172	460	57	517	133	650	114	764	38	802
Chargeable Student			0	0	0	125	125	101	226	-10	216	-28	188
b. ENLISTED - USN													
Operational Billets ACDU and TAR													
ATC	8341		8	5	13	2	15	4	19	3	22	2	24
AT1	8341		18	12	30	4	34	8	42	6	48	4	52
AT1	8341	6701	5	3	8	2	10	4	14	3	17	2	19
AT2	8341		39	24	63	10	73	20	93	15	108	10	118
AT3	8841		46	25	71	10	81	20	101	15	116	10	126
ATAN	8841		62	40	102	16	118	32	150	24	174	17	191
Fleet Support Billets ACDU and TAR													
ATC	8341		3	0	3	0	3	0	3	0	3	0	3
ATC	8341	8342	1	0	1	0	1	0	1	0	1	0	1
AT1	8341		11	0	11	0	11	0	11	0	11	0	11
AT1	8341	8342	1	0	1	0	1	0	1	0	1	0	1
AT2	8341		19	0	19	0	19	0	19	0	19	0	19
AT2	8341	8342	2	0	2	0	2	0	2	0	2	0	2
AT3	8841		14	0	14	0	14	0	14	0	14	0	14
ATAN	8841		6	0	6	0	6	0	6	0	6	0	6
ATAN	8842	8841	2	0	2	0	2	0	2	0	2	0	2
Staff Billets ACDU and TAR													
ATC	8341		0	1	1	0	1	0	1	0	1	0	1
ATC	8341	9502	0	2	2	0	2	0	2	0	2	0	2
AT1	8341		0	1	1	0	1	0	1	0	1	0	1
AT1	8341	9502	12	3	15	0	15	0	15	0	15	0	15
AT2	8341		0	1	1	0	1	0	1	0	1	0	1
AT2	8341	9502	1	7	8	0	8	0	8	0	8	0	8

II.A.5. ANNUAL INCREMENTAL AND CUMULATIVE BILLETS

DESIG/ RATING	PNEC/ PMOS	SNEC/ SMOS	BILLET BASE	CFY03 +/-	CFY03 CUM	FY04 +/-	FY04 CUM	FY05 +/-	FY05 CUM	FY06 +/-	FY06 CUM	FY07 +/-	FY07 CUM
Chargeable Student Billets ACDU and TAR			28	-1	27	-8	19	24	43	1	44	-1	43
TOTAL USN ENLISTED BILLETS:													
Operational			178	109	287	44	331	88	419	66	485	45	530
Fleet Support			59	0	59	0	59	0	59	0	59	0	59
Staff			13	15	28	0	28	0	28	0	28	0	28
Chargeable Student			28	-1	27	-8	19	24	43	1	44	-1	43

c. OFFICER - USMC Not Applicable

d. ENLISTED - USMC Not Applicable

II.B. ANNUAL TRAINING INPUT REQUIREMENTS

CIN, COURSE TITLE: E-2A-061X, F/A-18E/F Fleet Replacement Pilot Category 1 Pipeline
COURSE LENGTH: 33.0 Weeks **NAVY TOUR LENGTH:** 36 Months
ATTRITION FACTOR: Navy: 0% **BACKOUT FACTOR:** 0.66

TRAINING		ACDU/TAR	CFY03		FY04		FY05		FY06		FY07	
ACTIVITY	SOURCE	SELRES	OFF	ENL	OFF	ENL	OFF	ENL	OFF	ENL	OFF	ENL
VFA-122 E/F FRS-West, NAS Lemoore												
	USN	ACDU	0		131		154		155		138	
		TOTAL:	0		131		154		155		138	

CIN, COURSE TITLE: D-2A-062X, F/A-18E/F Fleet Replacement Pilot Category 2 Pipeline
COURSE LENGTH: 17.0 Weeks **NAVY TOUR LENGTH:** 36 Months
ATTRITION FACTOR: Navy: 0% **BACKOUT FACTOR:** 0.34

TRAINING		ACDU/TAR	CFY03		FY04		FY05		FY06		FY07	
ACTIVITY	SOURCE	SELRES	OFF	ENL	OFF	ENL	OFF	ENL	OFF	ENL	OFF	ENL
VFA-174 E/F FRS-East, NAS Oceana												
	USN	ACDU	0		0		35		31		27	
		TOTAL:	0		0		35		31		27	

CIN, COURSE TITLE: E-2A-062X, F/A-18E/F Fleet Replacement Pilot Category 2 Pipeline
COURSE LENGTH: 17.0 Weeks **NAVY TOUR LENGTH:** 36 Months
ATTRITION FACTOR: Navy: 0% **BACKOUT FACTOR:** 0.34

TRAINING		ACDU/TAR	CFY03		FY04		FY05		FY06		FY07	
ACTIVITY	SOURCE	SELRES	OFF	ENL	OFF	ENL	OFF	ENL	OFF	ENL	OFF	ENL
VFA-122 E/F FRS-West, NAS Lemoore												
	USN	ACDU	0		23		26		32		31	
		TOTAL:	0		23		26		32		31	

CIN, COURSE TITLE: D-2A-063X, F/A-18E/F Fleet Replacement Pilot Category 3 Pipeline
COURSE LENGTH: 31.0 Weeks **NAVY TOUR LENGTH:** 36 Months
ATTRITION FACTOR: Navy: 0% **BACKOUT FACTOR:** 0.62

TRAINING		ACDU/TAR	CFY03		FY04		FY05		FY06		FY07	
ACTIVITY	SOURCE	SELRES	OFF	ENL	OFF	ENL	OFF	ENL	OFF	ENL	OFF	ENL
VFA-174 E/F FRS-East, NAS Oceana												
	USN	ACDU	0		0		17		15		13	
		TOTAL:	0		0		17		15		13	

CIN, COURSE TITLE: E-2A-063X, F/A-18E/F Fleet Replacement Pilot Category 3 Pipeline
COURSE LENGTH: 31.0 Weeks **NAVY TOUR LENGTH:** 36 Months
ATTRITION FACTOR: Navy: 0% **BACKOUT FACTOR:** 0.62

TRAINING		ACDU/TAR	CFY03		FY04		FY05		FY06		FY07	
ACTIVITY	SOURCE	SELRES	OFF	ENL	OFF	ENL	OFF	ENL	OFF	ENL	OFF	ENL
VFA-122 E/F FRS-West, NAS Lemoore												
	USN	ACDU	0		11		14		16		15	
		TOTAL:	0		11		14		16		15	

II.B. ANNUAL TRAINING INPUT REQUIREMENTS

CIN, COURSE TITLE: D-2A-064X, F/A-18E/F Fleet Replacement Pilot Category 4 Pipeline
COURSE LENGTH: 5.2 Weeks **NAVY TOUR LENGTH:** 36 Months
ATTRITION FACTOR: Navy: 0% **BACKOUT FACTOR:** 0.10

TRAINING		ACDU/TAR	CFY03		FY04		FY05		FY06		FY07	
ACTIVITY	SOURCE	SELRES	OFF	ENL	OFF	ENL	OFF	ENL	OFF	ENL	OFF	ENL
VFA-174 E/F FRS-East, NAS Oceana												
	USN	ACDU	0		0		4		4		4	
		TOTAL:	0		0		4		4		4	

CIN, COURSE TITLE: E-2A-064X, F/A-18E/F Fleet Replacement Pilot Category 4 Pipeline
COURSE LENGTH: 5.2 Weeks **NAVY TOUR LENGTH:** 36 Months
ATTRITION FACTOR: Navy: 0% **BACKOUT FACTOR:** 0.10

TRAINING		ACDU/TAR	CFY03		FY04		FY05		FY06		FY07	
ACTIVITY	SOURCE	SELRES	OFF	ENL	OFF	ENL	OFF	ENL	OFF	ENL	OFF	ENL
VFA-122 E/F FRS-West, NAS Lemoore												
	USN	ACDU	0		4		4		4		4	
		TOTAL:	0		4		4		4		4	

CIN, COURSE TITLE: D-2D-081X, F/A-18F Combat Capable Weapons Systems Officer (WSO) Category 1 Pipeline
COURSE LENGTH: 30.8 Weeks **NAVY TOUR LENGTH:** 36 Months
ATTRITION FACTOR: Navy: 0% **BACKOUT FACTOR:** 0.62

TRAINING		ACDU/TAR	CFY03		FY04		FY05		FY06		FY07	
ACTIVITY	SOURCE	SELRES	OFF	ENL	OFF	ENL	OFF	ENL	OFF	ENL	OFF	ENL
VFA-174 E/F FRS-East, NAS Oceana												
	USN	ACDU	0		0		60		45		36	
		TOTAL:	0		0		60		45		36	

CIN, COURSE TITLE: E-2D-081X, F/A-18F Combat Capable Weapons Systems Officer (WSO) Category 1 Pipeline
COURSE LENGTH: 30.8 Weeks **NAVY TOUR LENGTH:** 36 Months
ATTRITION FACTOR: Navy: 0% **BACKOUT FACTOR:** 0.62

TRAINING		ACDU/TAR	CFY03		FY04		FY05		FY06		FY07	
ACTIVITY	SOURCE	SELRES	OFF	ENL	OFF	ENL	OFF	ENL	OFF	ENL	OFF	ENL
VFA-122 E/F FRS-West, NAS Lemoore												
	USN	ACDU	0		32		43		43		38	
		TOTAL:	0		32		43		43		38	

CIN, COURSE TITLE: D-2D-082X, F/A-18F Combat Capable Weapons Systems Officer (WSO) Category 2 Pipeline
COURSE LENGTH: 27.2 Weeks **NAVY TOUR LENGTH:** 36 Months
ATTRITION FACTOR: Navy: 0% **BACKOUT FACTOR:** 0.54

TRAINING		ACDU/TAR	CFY03		FY04		FY05		FY06		FY07	
ACTIVITY	SOURCE	SELRES	OFF	ENL	OFF	ENL	OFF	ENL	OFF	ENL	OFF	ENL
VFA-174 E/F FRS-East, NAS Oceana												
	USN	ACDU	0		0		24		19		14	
		TOTAL:	0		0		24		19		14	

II.B. ANNUAL TRAINING INPUT REQUIREMENTS

CIN, COURSE TITLE: E-2D-082X, F/A-18F Combat Capable Weapons Systems Officer (WSO) Category 2 Pipeline
COURSE LENGTH: 27.2 Weeks **NAVY TOUR LENGTH:** 36 Months
ATTRITION FACTOR: Navy: 0% **BACKOUT FACTOR:** 0.54

TRAINING		ACDU/TAR	CFY03		FY04		FY05		FY06		FY07	
ACTIVITY	SOURCE	SELRES	OFF	ENL	OFF	ENL	OFF	ENL	OFF	ENL	OFF	ENL
VFA-122 E/F FRS-West, NAS Lemoore												
	USN	ACDU	0		13		17		18		15	
		TOTAL:	0		13		17		18		15	

CIN, COURSE TITLE: D-2D-083X, F/A-18F Combat Capable Weapons Systems Officer (WSO) Category 3 Pipeline
COURSE LENGTH: 23.0 Weeks **NAVY TOUR LENGTH:** 36 Months
ATTRITION FACTOR: Navy: 0% **BACKOUT FACTOR:** 0.46

TRAINING		ACDU/TAR	CFY03		FY04		FY05		FY06		FY07	
ACTIVITY	SOURCE	SELRES	OFF	ENL	OFF	ENL	OFF	ENL	OFF	ENL	OFF	ENL
VFA-174 E/F FRS-East, NAS Oceana												
	USN	ACDU	0		0		12		10		7	
		TOTAL:	0		0		12		10		7	

CIN, COURSE TITLE: E-2D-083X, F/A-18F Combat Capable Weapons Systems Officer (WSO) Category 3 Pipeline
COURSE LENGTH: 23.0 Weeks **NAVY TOUR LENGTH:** 36 Months
ATTRITION FACTOR: Navy: 0% **BACKOUT FACTOR:** 0.46

TRAINING		ACDU/TAR	CFY03		FY04		FY05		FY06		FY07	
ACTIVITY	SOURCE	SELRES	OFF	ENL	OFF	ENL	OFF	ENL	OFF	ENL	OFF	ENL
VFA-122 E/F FRS-West, NAS Lemoore												
	USN	ACDU	0		6		8		9		8	
		TOTAL:	0		6		8		9		8	

CIN, COURSE TITLE: D-2D-084X, F/A-18F Combat Capable Weapons Systems Officer (WSO) Category 4 Pipeline
COURSE LENGTH: 5.2 Weeks **NAVY TOUR LENGTH:** 36 Months
ATTRITION FACTOR: Navy: 0% **BACKOUT FACTOR:** 0.10

TRAINING		ACDU/TAR	CFY03		FY04		FY05		FY06		FY07	
ACTIVITY	SOURCE	SELRES	OFF	ENL	OFF	ENL	OFF	ENL	OFF	ENL	OFF	ENL
VFA-174 E/F FRS-East, NAS Oceana												
	USN	ACDU	0		0		2		2		2	
		TOTAL:	0		0		2		2		2	

CIN, COURSE TITLE: E-2D-084X, F/A-18F Combat Capable Weapons Systems Officer (WSO) Category 4 Pipeline
COURSE LENGTH: 5.2 Weeks **NAVY TOUR LENGTH:** 36 Months
ATTRITION FACTOR: Navy: 0% **BACKOUT FACTOR:** 0.10

TRAINING		ACDU/TAR	CFY03		FY04		FY05		FY06		FY07	
ACTIVITY	SOURCE	SELRES	OFF	ENL	OFF	ENL	OFF	ENL	OFF	ENL	OFF	ENL
VFA-122 E/F FRS-West, NAS Lemoore												
	USN	ACDU	0		2		2		2		2	
		TOTAL:	0		2		2		2		2	

II.B. ANNUAL TRAINING INPUT REQUIREMENTS

CIN, COURSE TITLE: D-102-0625, F/A-18E/F Avionics Differences Data Pipeline
COURSE LENGTH: 5.6 Weeks **NAVY TOUR LENGTH:** 36 Months
ATTRITION FACTOR: Navy: 10% **BACKOUT FACTOR:** 0.11

TRAINING ACTIVITY	SOURCE	ACDU/TAR SELRES	CFY03 OFF	CFY03 ENL	FY04 OFF	FY04 ENL	FY05 OFF	FY05 ENL	FY06 OFF	FY06 ENL	FY07 OFF	FY07 ENL
MTU 1039 NAMTRAU Oceana												
	USN	ACDU		0		0		6		6		6
		TOTAL:		0		0		6		6		6

CIN, COURSE TITLE: E-102-0625, F/A-18E/F Avionics Differences Data Pipeline
COURSE LENGTH: 5.6 Weeks **NAVY TOUR LENGTH:** 36 Months
ATTRITION FACTOR: Navy: 10% **BACKOUT FACTOR:** 0.11

TRAINING ACTIVITY	SOURCE	ACDU/TAR SELRES	CFY03 OFF	CFY03 ENL	FY04 OFF	FY04 ENL	FY05 OFF	FY05 ENL	FY06 OFF	FY06 ENL	FY07 OFF	FY07 ENL
MTU 1038 NAMTRAU Lemoore												
	USN	ACDU		20		12		12		14		14
		TOTAL:		20		12		12		14		14

CIN, COURSE TITLE: D-102-0623, F/A-18E/F Avionic Systems (Initial) Organizational Maintenance Pipeline
COURSE LENGTH: 13.0 Weeks **NAVY TOUR LENGTH:** 36 Months
ATTRITION FACTOR: Navy: 10% **BACKOUT FACTOR:** 0.26

TRAINING ACTIVITY	SOURCE	ACDU/TAR SELRES	CFY03 OFF	CFY03 ENL	FY04 OFF	FY04 ENL	FY05 OFF	FY05 ENL	FY06 OFF	FY06 ENL	FY07 OFF	FY07 ENL
MTU 1039 NAMTRAU Oceana												
	USN	ACDU		0		0		76		67		61
		TOTAL:		0		0		76		67		61

CIN, COURSE TITLE: E-102-0623, F/A-18E/F Avionics Systems (Initial) Organizational Maintenance Pipeline
COURSE LENGTH: 13.0 Weeks **NAVY TOUR LENGTH:** 36 Months
ATTRITION FACTOR: Navy: 10% **BACKOUT FACTOR:** 0.26

TRAINING ACTIVITY	SOURCE	ACDU/TAR SELRES	CFY03 OFF	CFY03 ENL	FY04 OFF	FY04 ENL	FY05 OFF	FY05 ENL	FY06 OFF	FY06 ENL	FY07 OFF	FY07 ENL
MTU 1038 NAMTRAU Lemoore												
	USN	ACDU		82		60		64		76		78
		TOTAL:		82		60		64		76		78

CIN, COURSE TITLE: D-102-0624, F/A-18E/F Avionic Systems (Career) Organizational Maintenance Pipeline
COURSE LENGTH: 6.6 Weeks **NAVY TOUR LENGTH:** 36 Months
ATTRITION FACTOR: Navy: 10% **BACKOUT FACTOR:** 0.13

TRAINING ACTIVITY	SOURCE	ACDU/TAR SELRES	CFY03 OFF	CFY03 ENL	FY04 OFF	FY04 ENL	FY05 OFF	FY05 ENL	FY06 OFF	FY06 ENL	FY07 OFF	FY07 ENL
MTU 1039 NAMTRAU Oceana												
	USN	ACDU		0		0		41		38		35
		TOTAL:		0		0		41		38		35

II.B. ANNUAL TRAINING INPUT REQUIREMENTS

CIN, COURSE TITLE: E-102-0624, F/A-18E/F Avionics Systems (Career) Organizational Maintenance Pipeline
COURSE LENGTH: 6.6 Weeks **NAVY TOUR LENGTH:** 36 Months
ATTRITION FACTOR: Navy: 10% **BACKOUT FACTOR:** 0.13

TRAINING		ACDU/TAR	CFY03		FY04		FY05		FY06		FY07	
ACTIVITY	SOURCE	SELRES	OFF	ENL	OFF	ENL	OFF	ENL	OFF	ENL	OFF	ENL
MTU 1038 NAMTRAU Lemoore												
	USN	ACDU		45		29		30		35		36
		TOTAL:		45		29		30		35		36

PART III - TRAINING REQUIREMENTS

The following elements are not affected by the AN/APG-79 AESA Radar and, therefore, are not included in Part III of this NTSP:

III.A.2. Follow-on Training

III.A.2.c. Unique Courses

III.A.3. Existing Training Phased Out

Note 1: Initial and Follow-on training courses are not finalized and new information regarding them will be documented when this NTSP is next updated.

Note 2: Only the West Coast FRS, VFA-122, will provide F/A-18E/F Pilot Category 1 training.

PART III - TRAINING REQUIREMENTS

III.A.1. INITIAL TRAINING REQUIREMENTS

COURSE TITLE: F/A-18E/F DT/OT Maintainer Initial Training [Cadre I]
COURSE DEVELOPER: Boeing [Contract Pending]
COURSE INSTRUCTOR: TBD
COURSE LENGTH: 45 Days
ACTIVITY DESTINATIONS: VX-9 China Lake

LOCATION, UIC	BEGIN DATE	STUDENTS OFF	ENL	CIV	
VX-9 China Lake, XXXXX	Apr 03		10		Input
			1.2		AOB
			1.2		Chargeable

COURSE TITLE: F/A-18E/F DT/OT Maintainer Initial Training [Cadre 1]
COURSE DEVELOPER: Boeing [Contract Pending]
COURSE INSTRUCTOR: TBD
COURSE LENGTH: 45 Days
ACTIVITY DESTINATIONS: VX-31 China Lake

LOCATION, UIC	BEGIN DATE	STUDENTS OFF	ENL	CIV	
VX-31 China Lake, XXXXX	May 03		10		Input
			1.2		AOB
			1.2		Chargeable

COURSE TITLE: F/A-18E/F DT/OT Aircrew Initial Training [Cadre I]
COURSE DEVELOPER: Boeing [Contract Pending]
COURSE INSTRUCTOR: TBD
COURSE LENGTH: 45 Days
ACTIVITY DESTINATIONS: VX-31 China Lake, VX-9 China Lake

LOCATION, UIC	BEGIN DATE	STUDENTS OFF	ENL	CIV	
Boeing "Dome" St. Louis, XXXXX	Jun 03	4			Input
		0.5			AOB
		0.5			Chargeable

III.A.1. INITIAL TRAINING REQUIREMENTS

COURSE TITLE: F/A-18E/F DT/OT Aircrew Initial Training [Cadre I]
COURSE DEVELOPER: Boeing [Contract Pending]
COURSE INSTRUCTOR: TBD
COURSE LENGTH: 45 Days
ACTIVITY DESTINATIONS: VX-31 China Lake, VX-9 China Lake

LOCATION, UIC	BEGIN DATE	STUDENTS OFF	ENL	CIV	
Boeing "Dome" St. Louis, XXXXX	Aug 03	4			Input
		0.5			AOB
		0.5			Chargeable

COURSE TITLE: F/A-18E/F Fleet Aircrew Initial Training [Cadre II]
COURSE DEVELOPER: Boeing [Contract Pending]
COURSE INSTRUCTOR: TBD
COURSE LENGTH: 45 Days
ACTIVITY DESTINATIONS: VFA-122 E/F FRS West

LOCATION, UIC	BEGIN DATE	STUDENTS OFF	ENL	CIV	
Boeing "Dome" St. Louis, XXXXX	Sep 03	12			Input
		1.5			AOB
		1.5			Chargeable

COURSE TITLE: F/A-18E/F Fleet Maintainer Initial Training [Cadre II]
COURSE DEVELOPER: Boeing [Contract Pending]
COURSE INSTRUCTOR: TBD
COURSE LENGTH: 45 Days
ACTIVITY DESTINATIONS: VFA-122 E/F FRS West

LOCATION, UIC	BEGIN DATE	STUDENTS OFF	ENL	CIV	
VFA-122 E/F FRS West, XXXXX	Sep 03		12		Input
			1.5		AOB
			1.5		Chargeable

COURSE TITLE: F/A-18E/F Fleet Aircrew Initial Training [Cadre II]
COURSE DEVELOPER: Boeing [Contract Pending]
COURSE INSTRUCTOR: TBD
COURSE LENGTH: 45 Days
ACTIVITY DESTINATIONS: VFA-174 Oceana

LOCATION, UIC	BEGIN DATE	STUDENTS OFF	ENL	CIV	
Boeing "Dome" St. Louis, XXXXX	Oct 03	12			Input
		1.5			AOB
		1.5			Chargeable

III.A.1. INITIAL TRAINING REQUIREMENTS

COURSE TITLE: F/A-18E/F Fleet Maintainer Initial Training [Cadre II]
COURSE DEVELOPER: Boeing [Contract Pending]
COURSE INSTRUCTOR: TBD
COURSE LENGTH: 45 Days
ACTIVITY DESTINATIONS: On-Site at Destination Activity

LOCATION, UIC	BEGIN DATE	STUDENTS OFF	ENL	CIV	
Destination Activity	Oct 03		12		Input
			1.5		AOB
			1.5		Chargeable

III.A.2. FOLLOW-ON TRAINING

III.A.2.a. EXISTING COURSES

CIN, COURSE TITLE: E-102-0623, F/A-18E/F Avionics Systems (Initial) Organizational Maintenance Pipeline
TRAINING ACTIVITY: MTU 1038 NAMTRAU
LOCATION, UIC: NAS Lemoore, 66060

SOURCE: USN **STUDENT CATEGORY:** ACDU - TAR

CFY03		FY04		FY05		FY06		FY07		
OFF	ENL	OFF	ENL	OFF	ENL	OFF	ENL	OFF	ENL	
	82		60		64		76		78	ATIR
	74		54		58		68		70	Output
	19.0		13.9		14.8		17.6		18.1	AOB
	19.0		13.9		14.8		17.6		18.1	Chargeable

CIN, COURSE TITLE: E-102-0624, F/A-18E/F Avionics Systems (Career) Organizational Maintenance Pipeline
TRAINING ACTIVITY: MTU 1038 NAMTRAU
LOCATION, UIC: NAS Lemoore, 66060

SOURCE: USN **STUDENT CATEGORY:** ACDU - TAR

CFY03		FY04		FY05		FY06		FY07		
OFF	ENL	OFF	ENL	OFF	ENL	OFF	ENL	OFF	ENL	
	45		29		30		35		36	ATIR
	41		26		27		32		32	Output
	5.3		3.4		3.5		4.1		4.2	AOB
	5.3		3.4		3.5		4.1		4.2	Chargeable

CIN, COURSE TITLE: E-102-0625, F/A-18E/F Avionics Differences Data Pipeline
TRAINING ACTIVITY: MTU 1038 NAMTRAU
LOCATION, UIC: NAS Lemoore, 66060

SOURCE: USN **STUDENT CATEGORY:** ACDU - TAR

CFY03		FY04		FY05		FY06		FY07		
OFF	ENL	OFF	ENL	OFF	ENL	OFF	ENL	OFF	ENL	
	20		12		12		14		14	ATIR
	18		11		11		13		13	Output
	2.0		1.2		1.2		1.4		1.4	AOB
	2.0		1.2		1.2		1.4		1.4	Chargeable

III.A.2.b. PLANNED COURSES

CIN, COURSE TITLE: E-2A-061X, F/A-18E/F Fleet Replacement Pilot Category 1 Pipeline
TRAINING ACTIVITY: VFA-122 E/F FRS-West
LOCATION, UIC: NAS Lemoore, 09355

SOURCE: USN **STUDENT CATEGORY:** ACDU - TAR

CFY03		FY04		FY05		FY06		FY07		
OFF	ENL	OFF	ENL	OFF	ENL	OFF	ENL	OFF	ENL	
0		131		154		155		138		ATIR
0		131		154		155		138		Output
0.0		82.2		96.6		97.2		86.6		AOB
0.0		82.2		96.6		97.2		86.6		Chargeable

CIN, COURSE TITLE: D-2A-062X, F/A-18E/F Fleet Replacement Pilot Category 2 Pipeline
TRAINING ACTIVITY: VFA-174 E/F FRS-East
LOCATION, UIC: NAS Oceana, 65553

SOURCE: USN **STUDENT CATEGORY:** ACDU - TAR

CFY03		FY04		FY05		FY06		FY07		
OFF	ENL	OFF	ENL	OFF	ENL	OFF	ENL	OFF	ENL	
0		0		35		31		27		ATIR
0		0		35		31		27		Output
0.0		0.0		11.2		9.9		8.7		AOB
0.0		0.0		11.2		9.9		8.7		Chargeable

CIN, COURSE TITLE: E-2A-062X, F/A-18E/F Fleet Replacement Pilot Category 2 Pipeline
TRAINING ACTIVITY: VFA-122 E/F FRS-West
LOCATION, UIC: NAS Lemoore, 09355

SOURCE: USN **STUDENT CATEGORY:** ACDU - TAR

CFY03		FY04		FY05		FY06		FY07		
OFF	ENL	OFF	ENL	OFF	ENL	OFF	ENL	OFF	ENL	
0		23		26		32		31		ATIR
0		23		26		32		31		Output
0.0		7.4		8.3		10.3		9.9		AOB
0.0		7.4		8.3		10.3		9.9		Chargeable

III.A.2.b. PLANNED COURSES

CIN, COURSE TITLE: D-2A-063X, F/A-18E/F Fleet Replacement Pilot Category 3 Pipeline
TRAINING ACTIVITY: VFA-174 E/F FRS-East
LOCATION, UIC: NAS Oceana, 65553

SOURCE: USN **STUDENT CATEGORY:** ACDU - TAR

CFY03		FY04		FY05		FY06		FY07		
OFF	ENL	OFF	ENL	OFF	ENL	OFF	ENL	OFF	ENL	
0		0		17		15		13		ATIR
0		0		17		15		13		Output
0.0		0.0		10.0		8.8		7.7		AOB
0.0		0.0		10.0		8.8		7.7		Chargeable

CIN, COURSE TITLE: E-2A-063X, F/A-18E/F Fleet Replacement Pilot Category 3 Pipeline
TRAINING ACTIVITY: VFA-122 E/F FRS-West
LOCATION, UIC: NAS Lemoore, 09355

SOURCE: USN **STUDENT CATEGORY:** ACDU - TAR

CFY03		FY04		FY05		FY06		FY07		
OFF	ENL	OFF	ENL	OFF	ENL	OFF	ENL	OFF	ENL	
0		11		14		16		15		ATIR
0		11		14		16		15		Output
0.0		6.5		8.2		9.4		8.8		AOB
0.0		6.5		8.2		9.4		8.8		Chargeable

CIN, COURSE TITLE: D-2A-064X, F/A-18E/F Fleet Replacement Pilot Category 4 Pipeline
TRAINING ACTIVITY: VFA-174 E/F FRS-East
LOCATION, UIC: NAS Oceana, 65553

SOURCE: USN **STUDENT CATEGORY:** ACDU - TAR

CFY03		FY04		FY05		FY06		FY07		
OFF	ENL	OFF	ENL	OFF	ENL	OFF	ENL	OFF	ENL	
0		0		9		9		9		ATIR
0		0		9		9		9		Output
0.0		0.0		0.9		0.9		0.9		AOB
0.0		0.0		0.9		0.9		0.9		Chargeable

III.A.2.b. PLANNED COURSES

CIN, COURSE TITLE: E-2A-064X, F/A-18E/F Fleet Replacement Pilot Category 4 Pipeline
TRAINING ACTIVITY: VFA-122 E/F FRS-West
LOCATION, UIC: NAS Lemoore, 09355

SOURCE: USN **STUDENT CATEGORY:** ACDU - TAR

CFY03		FY04		FY05		FY06		FY07		
OFF	ENL	OFF	ENL	OFF	ENL	OFF	ENL	OFF	ENL	
0		9		9		9		9		ATIR
0		9		9		9		9		Output
0.0		0.9		0.9		0.9		0.9		AOB
0.0		0.9		0.9		0.9		0.9		Chargeable

CIN, COURSE TITLE: D-2D-081X, F/A-18F Combat Capable Weapons Systems Officer (WSO) Category 1 Pipeline
TRAINING ACTIVITY: VFA-174 E/F FRS-East
LOCATION, UIC: NAS Oceana, 65553

SOURCE: USN **STUDENT CATEGORY:** ACDU - TAR

CFY03		FY04		FY05		FY06		FY07		
OFF	ENL	OFF	ENL	OFF	ENL	OFF	ENL	OFF	ENL	
0		0		60		45		36		ATIR
0		0		60		45		36		Output
0.0		0.0		35.2		26.4		21.1		AOB
0.0		0.0		35.2		26.4		21.1		Chargeable

CIN, COURSE TITLE: E-2D-081X, F/A-18F Combat Capable Weapons Systems Officer (WSO) Category 1 Pipeline
TRAINING ACTIVITY: VFA-122 E/F FRS-West
LOCATION, UIC: NAS Lemoore, 09355

SOURCE: USN **STUDENT CATEGORY:** ACDU - TAR

CFY03		FY04		FY05		FY06		FY07		
OFF	ENL	OFF	ENL	OFF	ENL	OFF	ENL	OFF	ENL	
0		32		43		43		38		ATIR
0		32		43		43		38		Output
0.0		18.8		25.2		25.2		22.3		AOB
0.0		18.8		25.2		25.2		22.3		Chargeable

III.A.2.b. PLANNED COURSES

CIN, COURSE TITLE: D-2D-082X, F/A-18F Combat Capable Weapons Systems Officer (WSO) Category 2 Pipeline
TRAINING ACTIVITY: VFA-174 E/F FRS-East
LOCATION, UIC: NAS Oceana, 65553

SOURCE: USN **STUDENT CATEGORY:** ACDU - TAR

CFY03		FY04		FY05		FY06		FY07		
OFF	ENL	OFF	ENL	OFF	ENL	OFF	ENL	OFF	ENL	
0		0		24		19		14		ATIR
0		0		24		19		14		Output
0.0		0.0		12.5		9.9		7.3		AOB
0.0		0.0		12.5		9.9		7.3		Chargeable

CIN, COURSE TITLE: E-2D-082X, F/A-18F Combat Capable Weapons Systems Officer (WSO) Category 2 Pipeline
TRAINING ACTIVITY: VFA-122 E/F FRS-West
LOCATION, UIC: NAS Lemoore, 09355

SOURCE: USN **STUDENT CATEGORY:** ACDU - TAR

CFY03		FY04		FY05		FY06		FY07		
OFF	ENL	OFF	ENL	OFF	ENL	OFF	ENL	OFF	ENL	
0		13		17		18		15		ATIR
0		13		17		18		15		Output
0.0		6.8		8.8		9.4		7.8		AOB
0.0		6.8		8.8		9.4		7.8		Chargeable

CIN, COURSE TITLE: D-2D-083X, F/A-18F Combat Capable Weapons Systems Officer (WSO) Category 3 Pipeline
TRAINING ACTIVITY: VFA-174 E/F FRS-East
LOCATION, UIC: NAS Oceana, 65553

SOURCE: USN **STUDENT CATEGORY:** ACDU - TAR

CFY03		FY04		FY05		FY06		FY07		
OFF	ENL	OFF	ENL	OFF	ENL	OFF	ENL	OFF	ENL	
0		0		12		10		7		ATIR
0		0		12		10		7		Output
0.0		0.0		5.2		4.4		3.0		AOB
0.0		0.0		5.2		4.4		3.0		Chargeable

III.A.2.b. PLANNED COURSES

CIN, COURSE TITLE: E-2D-083X, F/A-18F Combat Capable Weapons Systems Officer (WSO) Category 3 Pipeline
TRAINING ACTIVITY: VFA-122 E/F FRS-West
LOCATION, UIC: NAS Lemoore, 09355

SOURCE: USN **STUDENT CATEGORY:** ACDU - TAR

CFY03		FY04		FY05		FY06		FY07		
OFF	ENL	OFF	ENL	OFF	ENL	OFF	ENL	OFF	ENL	
0		6		8		9		8		ATIR
0		6		8		9		8		Output
0.0		2.6		3.5		3.9		3.5		AOB
0.0		2.6		3.5		3.9		3.5		Chargeable

CIN, COURSE TITLE: D-2D-084X, F/A-18F Combat Capable Weapons Systems Officer (WSO) Category 4 Pipeline
TRAINING ACTIVITY: VFA-174 E/F FRS-East
LOCATION, UIC: NAS Oceana, 65553

SOURCE: USN **STUDENT CATEGORY:** ACDU - TAR

CFY03		FY04		FY05		FY06		FY07		
OFF	ENL	OFF	ENL	OFF	ENL	OFF	ENL	OFF	ENL	
0		0		4		4		4		ATIR
0		0		4		4		4		Output
0.0		0.0		0.4		0.4		0.4		AOB
0.0		0.0		0.4		0.4		0.4		Chargeable

CIN, COURSE TITLE: E-2D-084X, F/A-18F Combat Capable Weapons Systems Officer (WSO) Category 4 Pipeline
TRAINING ACTIVITY: VFA-122 E/F FRS-West
LOCATION, UIC: NAS Lemoore, 09355

SOURCE: USN **STUDENT CATEGORY:** ACDU - TAR

CFY03		FY04		FY05		FY06		FY07		
OFF	ENL	OFF	ENL	OFF	ENL	OFF	ENL	OFF	ENL	
0		4		4		4		4		ATIR
0		4		4		4		4		Output
0.0		0.4		0.4		0.4		0.4		AOB
0.0		0.4		0.4		0.4		0.4		Chargeable

III.A.2.b. PLANNED COURSES

CIN, COURSE TITLE: D-102-0623, F/A-18E/F Avionic Systems (Initial) Organizational Maintenance Pipeline
TRAINING ACTIVITY: MTU 1039 NAMTRAU
LOCATION, UIC: NAS Oceana, 66045

SOURCE: USN **STUDENT CATEGORY:** ACDU - TAR

CFY03		FY04		FY05		FY06		FY07		
OFF	ENL	OFF	ENL	OFF	ENL	OFF	ENL	OFF	ENL	
0		0		76		67		61		ATIR
0		0		68		60		55		Output
0.0		0.0		17.6		15.5		14.1		AOB
0.0		0.0		17.6		15.5		14.1		Chargeable

CIN, COURSE TITLE: D-102-0624, F/A-18E/F Avionic Systems (Career) Organizational Maintenance Pipeline
TRAINING ACTIVITY: MTU 1039 NAMTRAU
LOCATION, UIC: NAS Oceana, 66045

SOURCE: USN **STUDENT CATEGORY:** ACDU - TAR

CFY03		FY04		FY05		FY06		FY07		
OFF	ENL	OFF	ENL	OFF	ENL	OFF	ENL	OFF	ENL	
0		0		41		38		35		ATIR
0		0		37		34		32		Output
0.0		0.0		4.8		4.5		4.1		AOB
0.0		0.0		4.8		4.5		4.1		Chargeable

CIN, COURSE TITLE: D-102-0625, F/A-18E/F Avionics Differences Data Pipeline
TRAINING ACTIVITY: MTU 1039 NAMTRAU
LOCATION, UIC: NAS Oceana, 66045

SOURCE: USN **STUDENT CATEGORY:** ACDU - TAR

CFY03		FY04		FY05		FY06		FY07		
OFF	ENL	OFF	ENL	OFF	ENL	OFF	ENL	OFF	ENL	
0		0		6		6		6		ATIR
0		0		5		5		5		Output
0.0		0.0		0.6		0.6		0.6		AOB
0.0		0.0		0.6		0.6		0.6		Chargeable

Note: Only the West Coast FRS, VFA-122, will provide F/A-18E/F Pilot Category 1 training.

PART IV - TRAINING LOGISTICS SUPPORT REQUIREMENTS

The following elements are not affected by the AN/APG-79 AESA Radar and, therefore, are not included in Part IV of this NTSP:

IV.B. Courseware Requirements

IV.B.3. Technical Manuals

IV.C. Facility Requirements

IV.C.1. Facility Requirements Summary (Space/Support) by Activity

IV.C.2. Facility Requirements Detailed by Activity and Course

IV.C.3. Facility Project Summary by Program

Note 1: Technical Manuals (Element IV.B. 3) are not listed here as it is expected that existing F/A-18E/F operator and maintainer paper publications, manuals, and electronic training manuals (IETMS) will be modified to include AN/APG-79 AESA data according to the applicable aircraft Type Model Series (i.e., by Bureau Number).

Note 2: Facility Requirements (Element IV.C): No new facilities are required at this time to support the AN/APG-79 system.

PART IV - TRAINING LOGISTICS SUPPORT REQUIREMENTS

IV.A. TRAINING HARDWARE

IV.A.1. TTE / GPTE / SPTE / ST / GPETE / SPETE

CIN, COURSE TITLE: C-102-9977, F/A-18E/F Avionics System (Initial) Organizational Maintenance (Track E-102-0623)
TRAINING ACTIVITY: MTU 1038 NAMTRAU
LOCATION, UIC: NAS Lemoore, 66060

ITEM NO.	EQUIPMENT / TYPE OR RANGE OF REPAIR	QTY REQD	DATE REQD	GFE CFE	STATUS
TTE					
1	AN/APG-79 AESA Radar Radome Removal Fixture	1	Jan 05	GFE	Pending

CIN, COURSE TITLE: C-102-9978, F/A-18E/F Avionics System (Career) Organizational Maintenance (Track E-102-0624)
TRAINING ACTIVITY: MTU 1038 NAMTRAU
LOCATION, UIC: NAS Lemoore, 66060

ITEM NO.	EQUIPMENT / TYPE OR RANGE OF REPAIR	QTY REQD	DATE REQD	GFE CFE	STATUS
TTE					
1	AN/APG-79 AESA Radar Radome Removal Fixture	1	Jan 05	GFE	Pending

CIN, COURSE TITLE: C-102-9979, F/A-18E/F Avionics Systems Difference Data Organizational Maintenance (Track E-102-0625)
TRAINING ACTIVITY: MTU 1038 NAMTRAU
LOCATION, UIC: NAS Lemoore, 66060

ITEM NO.	EQUIPMENT / TYPE OR RANGE OF REPAIR	QTY REQD	DATE REQD	GFE CFE	STATUS
TTE					
1	AN/APG-79 AESA Radar Radome Removal Fixture	1	Jan 05	GFE	Pending

CIN, COURSE TITLE: C-102-9977, F/A-18E/F Avionics System (Initial) Organizational Maintenance (Track D-102-0623)
TRAINING ACTIVITY: MTU 1039 NAMTRAU
LOCATION, UIC: NAS Oceana, 66045

ITEM NO.	EQUIPMENT / TYPE OR RANGE OF REPAIR	QTY REQD	DATE REQD	GFE CFE	STATUS
TTE					
1	AN/APG-79 AESA Radar Radome Removal Fixture	1	Jan 05	GFE	Pending

IV.A.1. TTE / GPTE / SPTE / ST / GPETE / SPETE

CIN, COURSE TITLE: C-102-9978, F/A-18E/F Avionics System (Career) Organizational Maintenance (Track D-102-0624)
TRAINING ACTIVITY: MTU 1039 NAMTRAU
LOCATION, UIC: NAS Oceana, 66045

ITEM NO.	EQUIPMENT / TYPE OR RANGE OF REPAIR	QTY REQD	DATE REQD	GFE CFE	STATUS
TTE					
1	AN/APG-79 AESA Radar Radome Removal Fixture	1	Jan 05	GFE	Pending

CIN, COURSE TITLE: C-102-9979, F/A-18E/F Avionics Systems Difference Data Organizational Maintenance (Track D-102-0625)
TRAINING ACTIVITY: MTU 1039 NAMTRAU
LOCATION, UIC: NAS Oceana, 66045

ITEM NO.	EQUIPMENT / TYPE OR RANGE OF REPAIR	QTY REQD	DATE REQD	GFE CFE	STATUS
TTE					
1	AN/APG-79 AESA Radar Radome Removal Fixture	1	Jan 05	GFE	Pending

Note 1: There is a requirement for four AN/APG-79 AESA Radar Radome Removal Fixtures for training purposes: one each at the VFA-122, VFA-174 (Proposed East Coast FRS), MTU 1038 NAMTRAU Lemoore, and MTU 1039 NAMTRAU Oceana.

Note 2: The three organizational level avionics courses (to be taught at both MTU 1038 NAMTRAU Lemoore and MTU 1039 NAMTRAU Oceana) will share a common AESA Radar Radome Removal Fixture at each location.

Note 3: There is an immediate requirement for VFA-122 to have an AN/APG-79 AESA Radar Radome Removal Fixture as training will begin there in June 2003. VFA-174 is tentatively planned to stand up in October 2003. The NAMTRAU MTUs are to be ready to train on AESA by second quarter FY05.

IV.A.2. TRAINING DEVICES

DEVICE: 15C13, F/A-18 Part Task Trainer (PTT)

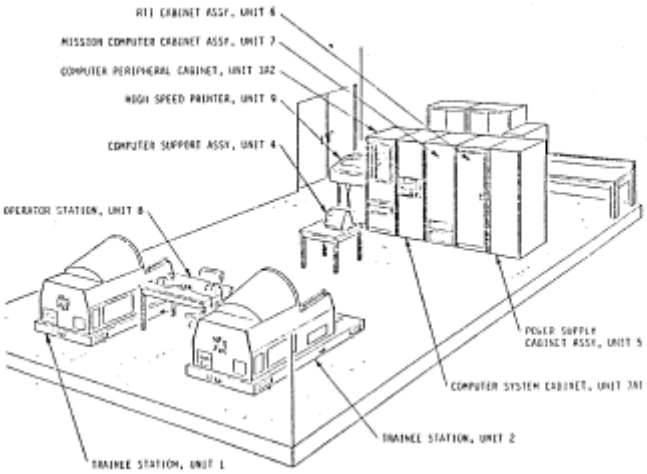

DESCRIPTION: Device 15C13, F/A-18 PTT, is a training complex that consists of two Trainee Stations each equipped with mockup F/A-18 Cockpits, an associated Simulation Computer System, an Operator Station with two Portable Control Terminals, a Power Supply Cabinet, a Mission Computer Cabinet housing four AN/AYK-14 Mission Computers, and another Interface Cabinet containing electronics that interface the Simulation Computer with the Cockpits. Other peripherals include a Gould CPU32/77, Magnetic Tape/Disk Cabinet, Line Printer, and a Card Reader. Device 15C13 accommodates two trainees simultaneously and may be used with or without an instructor.

The PTT provides F/A-18 aircrew with orientation and familiarization with the "Hands-On Throttle-And-Stick" (HOTAS) controls, limited radar intercept geometry, and an introduction to the basic capabilities of the combined use of HOTAS, the Up Front Control, the Master Monitor Display, the Multifunction Display, the Electronic Horizontal Situation Indicator, the Head-Up Display, and the Armament Panel. Device 15C13 is unclassified. Stock number is 6930-LL-C00-5213. (See Note 1.)

MANUFACTURER: Gould Simulation Systems
CONTRACT NUMBER: N61339-79-0121
TEE STATUS: NA

TRAINING ACTIVITY: COMSTRKFIGHTWINGLANT
LOCATION, UIC : NAS Oceana, 09103

QTY REQD	DATE REQD	RFT DATE	STATUS	COURSES SUPPORTED	
1		Jun 85	Onboard	E-2A-06X2	(Track D-2A-062X)
				E-2A-06X3	(Track D-2A-063X)
				E-2A-06X4	(Track D-2A-064X)

TRAINING ACTIVITY: COMSTRKFIGHTWINGPAC
LOCATION, UIC : NAS Lemoore, 09520

QTY REQD	DATE REQD	RFT DATE	STATUS	COURSES SUPPORTED	
1		Jun 82	Onboard	E-2A-06X1	(Track E-2A-061X)
				E-2A-06X2	(Track E-2A-062X)
				E-2A-06X3	(Track E-2A-063X)
				E-2A-06X4	(Track E-2A-064X)

IV.A.2. TRAINING DEVICES

DEVICE: 2E7, F/A-18 Weapons Tactics Trainer (WTT)

DESCRIPTION: Device 2E7, F/A-18 WTT, is a land-based Training Device weighing 169,700 pounds and occupying 13,406 square feet of space. It is a dual training complex, consisting of two identical training areas and numerous supporting stations and consoles. Each training area consists of an actual F/A-18 Cockpit mounted near the center of a large sphere. Simulated images of the sky, earth, targets, and gunfire are projected on the inner surface of the sphere and are viewed by the trainee during the training exercise. The advanced design of the computer image generator permits detail and realism in these visual presentations. Device 2E7 is housed in five rooms and/or areas at a facility:

- Room 1 is the Trainee Room, containing the two spheres.
- Room 2 contains two Instructor Stations, from where the instructor(s) monitor and control the exercises.
- Room 3 contains the Debrief Station where the recorded exercise may be played back for discussion with the trainee.
- Room 4 contains the Computer Image Generator, which generates video for the presentations, and an equipment monitor console and the interface electronics.
- Room 5 contains the Digital Computers.

Unmodified, operational equipment used includes numerous cockpit instruments and:

- 2 General Electric Flight Control Computers
- 2 AN/AYK-14(V) Mission Computers

During training exercises, the trainee utilizes all flight and weapon controls of the cockpit while experiencing all sights, sounds, accelerations, and buffets that would be encountered on an actual flight mission. An Instructor, who has direct communication the Trainee(s), coordinates and monitors training exercises. Trainees may aid or oppose each other in a coordinated exercise. Alternatively, either or both Trainees may oppose an Instructor and/or a computer. Air-to-air combat training exercises are possible in three ways:

- Trainee opposes a threat aircraft (one-on-one)
- Trainee opposes two threat aircraft (one-on-two)
- Trainee and a friendly aircraft oppose a threat aircraft (two on one)

The Instructor can record the exercise for later playback in Room 3 where the playback can be "frozen" at any time for detailed examination. Device 2E7 is unclassified. Stock Number is 6930-LL-C00-5212. (See Note 1.)

MANUFACTURER: Hughes Aircraft Co., El Segundo, California
CONTRACT NUMBER: N61339-79-C-0169
TEE STATUS: NA

TRAINING ACTIVITY: COMSTRKFIGHTWINGLANT
LOCATION, UIC : NAS Oceana, 09103

QTY REQD	DATE REQD	RFT DATE	STATUS	COURSES SUPPORTED	
1		Jun 86	Onboard	E-2A-06X1	(Track D-2A-061X)
		Sep 90		E-2A-06X2	(Track D-2A-062X)
		Jun 86		E-2A-06X2	(Track D-2A-062X)
				E-2A-06X3	(Track D-2A-063X)
		Sep 90		E-2A-06X3	(Track D-2A-063X)
		Jun 86		E-2A-06X4	(Track D-2A-064X)
		Sep 90		E-2A-06X4	(Track D-2A-064X)

IV.A.2. TRAINING DEVICES

QTY REQD	DATE REQD	RFT DATE	STATUS	COURSES SUPPORTED	
1		Jun 86	Onboard	E-2D-08X1	(Track D-2D-081X)
		Sep 90		E-2D-08X1	(Track D-2D-081X)
				E-2D-08X2	(Track D-2D-082X)
		Jun 86		E-2D-08X2	(Track D-2D-082X)
		Sep 90		E-2D-08X3	(Track D-2D-083X)
		Jun 86		E-2D-08X3	(Track D-2D-083X)
		Sep 90		E-2D-08X4	(Track D-2D-084X)
		Jun 86		E-2D-08X4	(Track D-2D-084X)

TRAINING ACTIVITY: COMSTRKFIGHTWINGPAC
LOCATION, UIC : NAS Lemoore, 09520

QTY REQD	DATE REQD	RFT DATE	STATUS	COURSES SUPPORTED	
1		Sep 84	Onboard	E-2A-06X1	(Track E-2A-061X)
		Sep 86		E-2A-06X1	(Track E-2A-061X)
		Sep 84		E-2A-06X2	(Track E-2A-062X)
		Sep 86		E-2A-06X2	(Track E-2A-062X)
		Sep 84		E-2A-06X3	(Track E-2A-063X)
		Sep 86		E-2A-06X3	(Track E-2A-063X)
				E-2A-06X4	(Track E-2A-064X)
		Sep 84		E-2A-06X4	(Track E-2A-064X)
				E-2D-08X1	(Track E-2D-081X)
		Sep 86		E-2D-08X1	(Track E-2D-081X)
		Sep 84		E-2D-08X2	(Track E-2D-082X)
		Sep 86		E-2D-08X2	(Track E-2D-082X)
		Sep 84		E-2D-08X3	(Track E-2D-083X)
		Sep 86		E-2D-08X3	(Track E-2D-083X)
		Sep 84		E-2D-08X4	(Track E-2D-084X)
		Sep 86		E-2D-08X4	(Track E-2D-084X)

IV.A.2. TRAINING DEVICES

DEVICE: 2F132, F/A-18 Operational Flight Trainer (OFT)

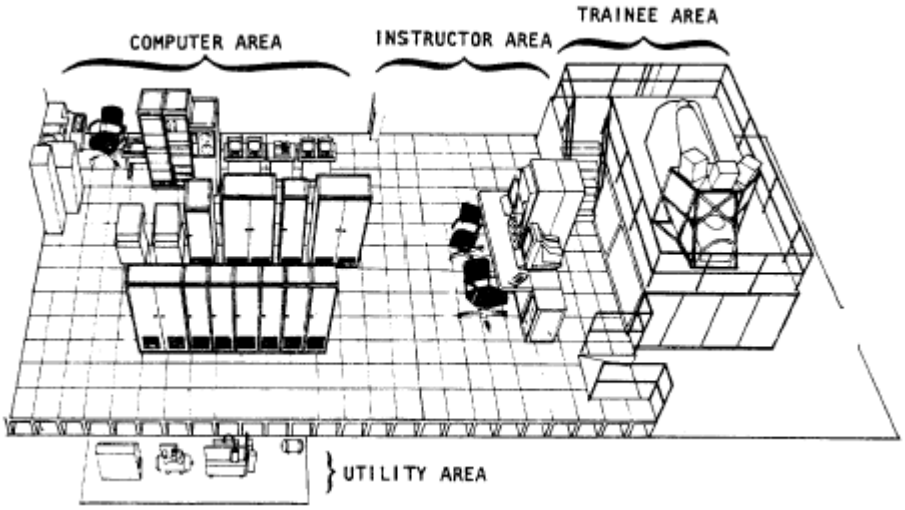

DESCRIPTION: Device 2F132, F/A-18 OFT, is a computer-controlled OFT incorporated in a training complex that consists of 39 pieces of equipment weighing over 20,860 pounds and occupying approximately 2,050 square feet of floor space divided into four major areas: Trainee Area, Instructor Area, Computer Area, and Utility Area. The Trainee and Instructor areas require a space of 33' x 31', the Computer area requires 29' x 31', and the Utility area requires 6' x 21'. The following unmodified operational equipment is used in the trainer:

- 1 Up Front Control
- 1 Master Monitor Display
- 1 Head-Up Display with Controls
- 1 Multifunction Display
- 1 Horizontal Situation Display
- 1 Flight Control Stick with HOTAS Controls
- 1 Throttle with HOTAS Controls
- 1 Digital Engine Monitor Display
- 1 Fuel Quantity Indicator
- 2 Flight Control Computers
- 1 Flight Control Computer Control Panel
- 2 Mission Computers (AN/AYK-14)

This Training Device provides realistic operational flight proficiency training for the F/A-18 Pilot by faithfully simulating the operation and response of the F/A-18 Aircraft flight controls, instruments, and systems, as well as its visual, aural, environmental, and motion sensations. The dusk/night visual display shows the surrounding carrier/airfield terrain throughout takeoff, maneuvers, and landing approach as a function of the aircraft attitude, altitude, and speed. Aural effects, such as engine turbine, engine nozzle, accessories, air conditioning turbine, and airflow also are simulated. An ejection seat shaker provides buffets simulation. A G-seat, used with a G-suit, provides motion cues. The Training Device includes such automated instructional features as procedural sequence monitoring, pre-programmed insertion of malfunctions, dynamic replay, parameter recording, checkride and automission programs, and demonstration flights. The Training Device can provide hard copy printouts for evaluating Trainee performance. Device 2F132 is confidential when software is loaded. Stock Number is 6930-LL-C00-5211. (See Note 1.)

MANUFACTURER: SSM-SECOR of Fairfax, Virginia
CONTRACT NUMBER: N61339-79-C-0144
TEE STATUS: N/A

TRAINING ACTIVITY: COMSTRKFIGHTWINGLANT
LOCATION, UIC : NAS Oceana, 09103

QTY REQD	DATE REQD	RFT DATE	STATUS	COURSES SUPPORTED	
1		Jun 85	Onboard	E-2A-06X1	(Track D-2A-061X)
				E-2A-06X2	(Track D-2A-062X)
		Sep 86		E-2A-06X2	(Track D-2A-062X)
		Jun 85		E-2A-06X3	(Track D-2A-063X)
		Sep 86		E-2A-06X3	(Track D-2A-063X)
		Jun 85		E-2A-06X4	(Track D-2A-064X)
		Sep 86		E-2A-06X4	(Track D-2A-064X)

TRAINING ACTIVITY: COMSTRKFIGHTWINGPAC
LOCATION, UIC : NAS Lemoore, 09520

QTY REQD	DATE REQD	RFT DATE	STATUS	COURSES SUPPORTED	
1		Jun 82	Onboard	E-2A-06X1	(Track E-2A-061X)
		Jul 86		E-2A-06X1	(Track E-2A-061X)
		Jun 82		E-2A-06X2	(Track E-2A-062X)
		Jul 86		E-2A-06X2	(Track E-2A-062X)
		Jun 82		E-2A-06X3	(Track E-2A-063X)
		Jul 86		E-2A-06X3	(Track E-2A-063X)
		Jun 82		E-2A-06X4	(Track E-2A-064X)
		Jul 86		E-2A-06X4	(Track E-2A-064X)

IV.A.2. TRAINING DEVICES

DEVICE: F/A-18E/F Avionics Maintenance Trainer

MTS-1 Avionics, MTU 1038 NAMTRAU, NAS Lemoore, CA

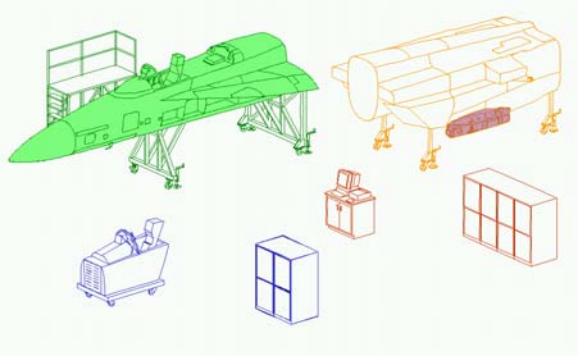

MTS-2 Avionics (under construction)

DESCRIPTION: Device F/A-18E/F Avionics System Maintenance Trainer consists of an F/A-18E/F Cockpit Mockup equipped with the avionics systems normally found in the cockpit, and those located in the forward fuselage, including the radar system and nose radome. The Avionics Maintenance Trainer is one part of a Maintenance Trainer Set (MTS) which also includes the maintenance trainers for Flight Control System/Composite Repair, Environmental Control System, Fuel, Armament, and Landing Gear/Hydraulics. The Avionics Maintenance Trainer provides a realistic representation of the F/A-18E/F avionics systems for training the Navy or Marine Corps organizational level Electronics Technician to be proficient in troubleshooting and repair procedures. (See Note 2.)

MANUFACTURER: Boeing
CONTRACT NUMBER: As per PMA205
TEE STATUS: NA

TRAINING ACTIVITY: MTU 1039 NAMTRAU
LOCATION, UIC : NAS Oceana, 66045

QTY REQD	DATE REQD	RFT DATE	STATUS	COURSES SUPPORTED
1	Jun 05		Pending	C-102-9977 (Track D-102-0623)
				C-102-9978 (Track D-102-0624)
				C-102-9979 (Track D-102-0625)

TRAINING ACTIVITY: MTU 1038 NAMTRAU
LOCATION, UIC : NAS Lemoore, 66060

QTY REQD	DATE REQD	RFT DATE	STATUS	COURSES SUPPORTED	
1	Oct 02	Oct 02	Onboard	C-102-9977	(Track E-102-0623)
				C-102-9978	(Track E-102-0624)
				C-102-9979	(Track E-102-0625)

IV.A.2. TRAINING DEVICES

DEVICE: Learning Resource Center (LRC)
DESCRIPTION: The Learning Resource Center functions both as a classroom and a central repository for all training materials delivered on digital media to a training activity. The LRC provides instructional materials such as Computer-Assisted Instruction (CAI), Interactive Courseware (ICW), trainee guides, and simulation software for user self-paced, refresher study to supplement formal classroom training. The LRC provides a workbench and development tools for instructors to review, update, and maintain instructional materials. The LRC also functions as an Electronic Classroom for backup or overflow classroom training. The primary components of the subsystem are the developer station, user workstations, presentation device, video controller, network server, Computer-Based Training (CBT) materials, and the Aviation Maintenance Continuum System Software Module (AMTCS) application program. (See Note 3.)
MANUFACTURER: Boeing Aircraft (Part Number 94108X-XXXX-XX)
CONTRACT NUMBER: N00600-96-D-0193
TEE STATUS: NA

TRAINING ACTIVITY: MTU 1039 NAMTRAU
LOCATION, UIC : NAS Oceana, 66045

QTY REQD	DATE REQD	RFT DATE	STATUS	COURSES SUPPORTED
1	Jan 02		Onboard	C-102-9977 (Track D-102-0623) C-102-9978 (Track D-102-0624) C-102-9979 (Track D-102-0625)

TRAINING ACTIVITY: MTU 1038 NAMTRAU
LOCATION, UIC : NAS Lemoore, 66060

QTY REQD	DATE REQD	RFT DATE	STATUS	COURSES SUPPORTED
1	Jan 02	Apr 02	Onboard	C-102-9977 (Track E-102-0623) C-102-9978 (Track E-102-0624) C-102-9979 (Track E-102-0625)

Note 1. Aircrew Training Devices and Simulators, such as Device 2E7, Weapons Tactics Trainer will require modification to provide a realistic cockpit mockup for training Aircrewmen to fly AESA-equipped F/A-18E/F aircraft. Modifications will consist of both hardware and software upgrades. Aircrew Training Devices will have to support both AN/APG-73 and AN/APG-79 AESA Radar Systems training.

Note 2. Maintenance Training Devices, such as the F/A-18E/F Maintenance Training Set (MTS) will require modification to provide realistic training for Navy maintenance personnel with NECs 8841 and 8341 assigned to perform troubleshooting and maintenance on AESA equipped F/A-18E/F aircraft. Modifications will consist of both hardware and software upgrades. The Avionics portions of the Training Devices will have to support both AN/APG-73 and AN/APG-79 AESA Radar Systems training.

The East Coast Maintenance Trainer Set (MTS #2) has not yet been procured.

Note 3. Navy Electronic Classroom and Learning Resource Center infrastructure will not require modification to support AN/APG-79 training. AN/APG-79 AESA specific training will be provided via the CBTI, and other pertinent instructional media.

IV.B. COURSEWARE REQUIREMENTS

IV.B.1. TRAINING SERVICES

COURSE / TYPE OF TRAINING	SCHOOL LOCATION, UIC	NO. OF PERSONNEL	MAN WEEKS REQUIRED	DATE BEGIN
F/A-18E/F DT/OT Aircrew Initial Training [Cadre 1]	Boeing "Dome" St. Louis, XXXXX			Aug 03
F/A-18E/F DT/OT Aircrew Initial Training [Cadre 1]	Boeing "Dome" St. Louis, XXXXX			Jun 03
F/A-18E/F DT/OT Maintainer Initial Training [Cadre 1]	VX-31 China Lake, XXXXX			May 03
F/A-18E/F DT/OT Maintainer Initial Training [Cadre 1]	VX-9 China Lake, XXXXX			Apr 03
F/A-18E/F Fleet Aircrew Initial Training [Cadre 2]	Boeing "Dome" St. Louis, XXXXX			Oct 03
F/A-18E/F Fleet Aircrew Initial Training [Cadre 2]	Boeing "Dome" St. Louis, XXXXX			Sep 03
F/A-18E/F Fleet Maintainer Initial Training [Cadre 2]	Destination Activity			Oct 03
F/A-18E/F Fleet Maintainer Initial Training [Cadre 2]	VFA-122 E/F FRS West, XXXXX			Sep 03

IV.B.2. CURRICULA MATERIALS AND TRAINING AIDS

CIN, COURSE TITLE: C-102-9977, F/A-18E/F Avionics System (Initial) Organizational Maintenance (Track E-102-0623)
TRAINING ACTIVITY: MTU 1038 NAMTRAU
LOCATION, UIC: NAS Lemoore, 66060

TYPES OF MATERIAL OR AID	QTY REQD	DATE REQD	STATUS
F/A-18E/F AESA Maintenance CBT and IETM Upgrade	1	Mar 05	Pending
F/A-18E/F AESA-Related AMTCS CBT	1	Mar 05	Pending

CIN, COURSE TITLE: C-102-9978, F/A-18E/F Avionics System (Career) Organizational Maintenance (Track E-102-0624)
TRAINING ACTIVITY: MTU 1038 NAMTRAU
LOCATION, UIC: NAS Lemoore, 66060

TYPES OF MATERIAL OR AID	QTY REQD	DATE REQD	STATUS
F/A-18E/F AESA Maintenance CBT and IETM Upgrade	1	Mar 05	Pending
F/A-18E/F AESA-Related AMTCS CBT	1	Mar 05	Pending

CIN, COURSE TITLE: C-102-9979, F/A-18E/F Avionics Systems Difference Data Organizational Maintenance (Track E-102-0625)
TRAINING ACTIVITY: MTU 1038 NAMTRAU
LOCATION, UIC: NAS Lemoore, 66060

TYPES OF MATERIAL OR AID	QTY REQD	DATE REQD	STATUS
F/A-18E/F AESA Maintenance CBT and IETM Upgrade	1	Mar 05	Pending
F/A-18E/F AESA-Related AMTCS CBT	1	Mar 05	Pending

CIN, COURSE TITLE: E-2A-06X1, F/A-18 Fleet Replacement Pilot Category 1 (Track E-2A-061X)
TRAINING ACTIVITY: VFA-122 E/F FRS-West
LOCATION, UIC: NAS Lemoore, 09355

TYPES OF MATERIAL OR AID	QTY REQD	DATE REQD	STATUS
F/A-18E/F Aircrew Training CBT Upgrade	1	Jun 05	Pending

CIN, COURSE TITLE: E-2A-06X2, F/A-18 Fleet Replacement Pilot Category 2 (Track D-2A-062X)
TRAINING ACTIVITY: VFA-174 E/F FRS-East
LOCATION, UIC: NAS Oceana, 65553

TYPES OF MATERIAL OR AID	QTY REQD	DATE REQD	STATUS
F/A-18E/F Aircrew Training CBT Upgrade	1	Jun 05	Pending

CIN, COURSE TITLE: E-2A-06X2, F/A-18 Fleet Replacement Pilot Category 2 (Track E-2A-062X)
TRAINING ACTIVITY: VFA-122 E/F FRS-West
LOCATION, UIC: NAS Lemoore, 09355

TYPES OF MATERIAL OR AID	QTY REQD	DATE REQD	STATUS
F/A-18E/F Aircrew Training CBT Upgrade	1	Jun 05	Pending

IV.B.2. CURRICULA MATERIALS AND TRAINING AIDS

CIN, COURSE TITLE: E-2A-06X3, F/A-18 Fleet Replacement Pilot Category 3 (Track D-2A-063X)
TRAINING ACTIVITY: VFA-174 E/F FRS-East
LOCATION, UIC: NAS Oceana, 65553

TYPES OF MATERIAL OR AID	QTY REQD	DATE REQD	STATUS
F/A-18E/F Aircrew Training CBT Upgrade	1	Jun 05	Pending

CIN, COURSE TITLE: E-2A-06X3, F/A-18 Fleet Replacement Pilot Category 3 (Track E-2A-063X)
TRAINING ACTIVITY: VFA-122 E/F FRS-West
LOCATION, UIC: NAS Lemoore, 09355

TYPES OF MATERIAL OR AID	QTY REQD	DATE REQD	STATUS
F/A-18E/F Aircrew Training CBT Upgrade	1	Jun 05	Pending

CIN, COURSE TITLE: E-2A-06X4, F/A-18 Fleet Replacement Pilot Category 4 (Track D-2A-064X)
TRAINING ACTIVITY: VFA-174 E/F FRS-East
LOCATION, UIC: NAS Oceana, 65553

TYPES OF MATERIAL OR AID	QTY REQD	DATE REQD	STATUS
F/A-18E/F Aircrew Training CBT Upgrade	1	Jun 05	Pending

CIN, COURSE TITLE: E-2A-06X4, F/A-18 Fleet Replacement Pilot Category 4 (Track E-2A-064X)
TRAINING ACTIVITY: VFA-122 E/F FRS-West
LOCATION, UIC: NAS Lemoore, 09355

TYPES OF MATERIAL OR AID	QTY REQD	DATE REQD	STATUS
F/A-18E/F Aircrew Training CBT Upgrade	1	Jun 05	Pending

CIN, COURSE TITLE: E-2D-08X1, F/A-18F Combat Capable Weapons Systems Officer (WSO) Cat 1 (Track D-2D-081X)
TRAINING ACTIVITY: VFA-174 E/F FRS-East
LOCATION, UIC: NAS Oceana, 65553

TYPES OF MATERIAL OR AID	QTY REQD	DATE REQD	STATUS
F/A-18E/F Aircrew Training CBT Upgrade	1	Jun 05	Pending

CIN, COURSE TITLE: E-2D-08X1, F/A-18F Combat Capable Weapons Systems Officer (WSO) Cat 1 (Track E-2D-081X)
TRAINING ACTIVITY: VFA-122 E/F FRS-West
LOCATION, UIC: NAS Lemoore, 09355

TYPES OF MATERIAL OR AID	QTY REQD	DATE REQD	STATUS
F/A-18E/F Aircrew Training CBT Upgrade	1	Jun 05	Pending

IV.B.2. CURRICULA MATERIALS AND TRAINING AIDS

CIN, COURSE TITLE: E-2D-08X2, F/A-18F Combat Capable Weapons Systems Officer (WSO) Cat 2 (Track D-2D-082X)
TRAINING ACTIVITY: VFA-174 E/F FRS-East
LOCATION, UIC: NAS Oceana, 65553

TYPES OF MATERIAL OR AID	QTY REQD	DATE REQD	STATUS
F/A-18E/F Aircrew Training CBT Upgrade	1	Jun 05	Pending

CIN, COURSE TITLE: E-2D-08X2, F/A-18F Combat Capable Weapons Systems Officer (WSO) Cat 2 (Track E-2D-082X)
TRAINING ACTIVITY: VFA-122 E/F FRS-West
LOCATION, UIC: NAS Lemoore, 09355

TYPES OF MATERIAL OR AID	QTY REQD	DATE REQD	STATUS
F/A-18E/F Aircrew Training CBT Upgrade	1	Jun 05	Pending

CIN, COURSE TITLE: E-2D-08X3, F/A-18F Combat Capable Weapons Systems Officer (WSO) Cat 3 (Track D-2D-083X)
TRAINING ACTIVITY: VFA-174 E/F FRS-East
LOCATION, UIC: NAS Oceana, 65553

TYPES OF MATERIAL OR AID	QTY REQD	DATE REQD	STATUS
F/A-18E/F Aircrew Training CBT Upgrade	1	Jun 05	Pending

CIN, COURSE TITLE: E-2D-08X3, F/A-18F Combat Capable Weapons Systems Officer (WSO) Cat 3 (Track E-2D-083X)
TRAINING ACTIVITY: VFA-122 E/F FRS-West
LOCATION, UIC: NAS Lemoore, 09355

TYPES OF MATERIAL OR AID	QTY REQD	DATE REQD	STATUS
F/A-18E/F Aircrew Training CBT Upgrade	1	Jun 05	Pending

CIN, COURSE TITLE: E-2D-08X4, F/A-18F Combat Capable Weapons Systems Officer (WSO) Cat 4 (Track D-2D-084X)
TRAINING ACTIVITY: VFA-174 E/F FRS-East
LOCATION, UIC: NAS Oceana, 65553

TYPES OF MATERIAL OR AID	QTY REQD	DATE REQD	STATUS
F/A-18E/F Aircrew Training CBT Upgrade	1	Jun 05	Pending

CIN, COURSE TITLE: E-2D-08X4, F/A-18F Combat Capable Weapons Systems Officer (WSO) Cat 4 (Track E-2D-084X)
TRAINING ACTIVITY: VFA-122 E/F FRS-West
LOCATION, UIC: NAS Lemoore, 09355

TYPES OF MATERIAL OR AID	QTY REQD	DATE REQD	STATUS
F/A-18E/F Aircrew Training CBT Upgrade	1	Jun 05	Pending

IV.B.2. CURRICULA MATERIALS AND TRAINING AIDS

CIN, COURSE TITLE: C-102-9977, F/A-18E/F Avionics System (Initial) Organizational Maintenance (Track D-102-0623)
TRAINING ACTIVITY: MTU 1039 NAMTRAU
LOCATION, UIC: NAS Oceana, 66045

TYPES OF MATERIAL OR AID	QTY REQD	DATE REQD	STATUS
F/A-18E/F AESA Maintenance CBT and IETM Upgrade	1	Mar 05	Pending
F/A-18E/F AESA-Related AMTCS CBT	1	Mar 05	Pending

CIN, COURSE TITLE: C-102-9978, F/A-18E/F Avionics System (Career) Organizational Maintenance (Track D-102-0624)
TRAINING ACTIVITY: MTU 1039 NAMTRAU
LOCATION, UIC: NAS Oceana, 66045

TYPES OF MATERIAL OR AID	QTY REQD	DATE REQD	STATUS
F/A-18E/F AESA Maintenance CBT and IETM Upgrade	1	Mar 05	Pending
F/A-18E/F AESA-Related AMTCS CBT	1	Mar 05	Pending

CIN, COURSE TITLE: C-102-9979, F/A-18E/F Avionics Systems Difference Data Organizational Maintenance (Track D-102-0625)
TRAINING ACTIVITY: MTU 1039 NAMTRAU
LOCATION, UIC: NAS Oceana, 66045

TYPES OF MATERIAL OR AID	QTY REQD	DATE REQD	STATUS
F/A-18E/F AESA Maintenance CBT and IETM Upgrade	1	Mar 05	Pending
F/A-18E/F AESA-Related AMTCS CBT	1	Mar 05	Pending

PART V - MPT MILESTONES

COG CODE	MPT MILESTONES	DATE	STATUS
PDA	Designated F/A-18E/F AN/APG-79 AESA Program ACAT-1C	Jun 99	Complete
TSA	Conducted (AN/APG-73 Equipped) F/A-18E/F Aircraft Cadre Aircrew Training at NAS Lemoore	Sep 99	Complete
TSA	Delivered AN/APG-73 Equipped F/A-18E/F Aircraft to NAS Lemoore	Oct 99	Complete
TSA	Conducted (AN/APG-73 Equipped) F/A-18E/F Cadre Maintenance Training at NAS Lemoore	Nov 99	Complete
PDA	Delivered LRIP-1 (AN/APG-73 equipped) F/A-18E/F Aircraft	Dec 99	Complete
PDA	Selected New F/A-18E/F Radar from Competitive Sources (Raytheon Selected)	Dec 99	Complete
TSA	Delivered (AN/APG-73 Equipped) F/A-18E/F Aircrew Training Courseware	Apr 00	Complete
PDA	Received F/A-18E/F Production Go-Ahead	FY00	Complete
PDA	Developed AN/APG-79 AESA ORD #568-58-00	Nov 00	Complete
Raytheon	Developed AN/APG-79 AESA Prototype with PDR Delivery	Dec 00	Complete
PDA	Signed AN/APG-79 AESA EDM Contract	Feb 01	Complete
PDA	Achieved Program Milestone B	Jan 02	Approved
PDA	Begin AN/APG-79 AESA In-Line Delivery	Mar 02	Pending
PDA	Began (AN/APG-73 Equipped) F/A-18E/F First Deployment	Jun 02	Ongoing
TSA	Developed Draft NTSP	Feb 03	Complete
TSA	Distributed Draft NTSP for Fleet Review	Feb 03	Complete
PDA	Begin AN/APG-79 AESA DT/OT - First Flight to use Unique AESA-equipped "F-19" Aircraft	May 03	Complete
TSA	Forward Proposed NTSP to OPNAV for Approval	Aug 03	Pending
PDA	Obtain AN/APG-79 AESA Program Milestone C Authority to Begin Low Rate Initial Production	Dec 03	Pending
PDA	Award AN/APG-79 AESA LRIP I Contract	Dec 03	Pending
PDA	Attain F/A-18E/F Aircraft MSD	FY03	Pending
PDA	Begin AN/APG-79 AESA TECHEVAL	Feb 05	Pending
PDA	AN/APG-79 AESA PCA (Possibly moving to September 2005)	May 05	Pending
PDA	Begin AN/APG-79 AESA Interim Support Period (by OEM Raytheon) to continue until MSD Achieved	May 05	Pending
PDA	Begin AN/APG-79 AESA OPEVAL	Jan 06	Pending
PDA	Achieve AN/APG-79 AESA Initial Operating Capacity	Sep 06	Pending
PDA	Begin AN/APG-79 AESA Full Rate Production Design Review	Jan 07	Pending
PDA	Begin AN/APG-79 AESA First Deployment to 12 Aircraft Squadron	Sep 07	Pending
PDA	Achieve AN/APG-79 AESA Material Support Date	Sep 07	Pending

Note: Pending events supplied with "best estimate" tentative dates as of August 2003. To be updated in future revisions.

PART VI - DECISION ITEMS / ACTION REQUIRED

DECISION ITEM OR ACTION REQUIRED	COMMAND ACTION	DUE DATE	STATUS
Decision to strike aircraft designated E-4 to disassemble and re-deploy as MTS-2 at NAMTRAU Oceana	PMA205	Jan 03	Complete
Review current CBT courseware and contracted-for deliverables and evaluate for SCORM compliancy. Provide assessment to N00T4.	PMA205	Dec 03	

PART VII - POINTS OF CONTACT

NAME / FUNCTION / ACTIVITY, CODE / INTERNET EMAIL	TELEPHONE NUMBERS
CAPT John Chase Deputy Aviation Maintenance Programs CNO, N781B john.chase@navy.mil	**COMM:** (703) 604-7747 **DSN:** 664-7747 **FAX:** (703) 604-6972
CDR Ray O'Donnell Resource Sponsor / Program Sponsor CNO, N785D1/E1 raymond.o'donnell@navy.mil	**COMM:** (703) 614-3375 **DSN:** 224-3375 **FAX:** (703) 695-3066
AZC Daniel Burlile NTSP Manager CNO, N789H7 daniel.burlile @navy.mil	**COMM:** (703) 604-7709 **DSN:** 664-7709 **FAX:** (703) 604-6972
LCDR Jim Arend Aviation Manpower CNO, N122C1C n122c1c@bupers.navy.mil	**COMM:** (703) 695-3223 **DSN:** 225-3223 **FAX:** (703) 614-5308
CAPT David Mahoney Head, Reserve Air Logistics Programs CNO, N0955F mahoney.david@navy.mil	**COMM:** (703) 601-1872 **DSN:** 329-1872 **FAX:** (703) 601-0561
CDR Scott Craig OPNAV Resource Sponsor CNO, N780D1 craig.scott@navy.mil	**COMM:** (703) 614-2930 **DSN:** 224-2930 **FAX:** (703) 614-0000
CAPT Mike Disano Professional Development Division Director CNO, N00T3 mike.disano@navy.mil	**COMM:** (703) 602-5172 **DSN:** 332-5172 **FAX:** (703) 602-5175
Mr. Robert Zweibel Human Performance and Acquisition Assessment Division CNO, N00T46 robert.zweibel@navy.mil	**COMM:** (703) 602-5151 **DSN:** 332-5151 **FAX:** (703) 602-5175
CAPT Donald Gaddis Program Manager NAVAIR, PMA265JW gaddisde@navair.navy.mil	**COMM:** (301) 757-7669 **DSN:** 757-7669 **FAX:** (301) 757-7623
CAPT Steve Bartlett F/A-18 Asst Program Manager, Logistics NAVAIR, PMA265 bartlettsw@navair.navy.mil	**COMM:** (301) 757-7578 **DSN:** 757-7578 **FAX:** (301) 757-7574

PART VII - POINTS OF CONTACT

NAME / FUNCTION / ACTIVITY, CODE / INTERNET EMAIL	TELEPHONE NUMBERS
CDR David Dunaway IPT Leader NAVAIR, PMA265DD dunawayda@navair.navy.mil	**COMM:** (301) 757-7624 **DSN:** 757-7624 **FAX:** (301) 757-7623
CAPT David Moroney F/A-18 Deputy for Systems Development NAVAIR, PMA265CE moroneydt@navair.navy.mil	**COMM:** (301) 757-7674 **DSN:** 757-7674 **FAX:** (301) 757-7623
CDR Brian Flachsbart Training Coordinator NAVAIR, PMA205D1 flachsbartbm@navair.navy.mil	**COMM:** (301) 757-7651 **DSN:** 757-7651 **FAX:** (301) 757-7520
Mr. Dennis Schumacher Contracting Support Services for PMA205 Information Spectrum, Incorporated, schumd@ispec.com	**COMM:** (240) 725-7871 **DSN:** **FAX:**
Mr. Ulic Cooper F/A-18E/F AESA Radar Supportability IPT Information Spectrum, Incorporated, PMA265/PMA205 coopu@ispec.com	**COMM:** (240) 725-7860 **DSN:** **FAX:** (240) 725-7006
Mr. Jerry Creadle Operations Logistics Manager F-18 Information Spectrum, Incorporated, PMA-265/PMA205 creajl@ispec.com	**COMM:** (240) 725-7105 **DSN:** **FAX:** (240) 725-7006
Mr. Phil Stewart Deputy APML NAVAIR, AIR 3.1.1C stewartpr@navair.navy.mil	**COMM:** (301) 757-7605 **DSN:** 757-7605 **FAX:** (301) 757-7613
CAPT Pat Salsman Branch Head, Training Requirements and Assessments COMLANTFLT, N72 salsmancp@clf.navy.mil	**COMM:** (757) 836-6495 **DSN:** 863-6495 **FAX:** (757) 836-6737
CDR Mike Hohl Aviation NTSP Point of Contact COMLANTFLT, N731 hohljm@clf.navy.mil	**COMM:** (757) 836-0085 **DSN:** 836-0085 **FAX:** (757) 836-6794
Mr. Bob Long Deputy Director for Training COMPACFLT, N70 longrh@cpf.navy.mil	**COMM:** (808) 471-8513 **DSN:** 471-8513 **FAX:** (808) 471-8596

PART VII - POINTS OF CONTACT

NAME / FUNCTION / ACTIVITY, CODE / INTERNET EMAIL	TELEPHONE NUMBERS
LCDR Rick Lawson NTSP Manager COMOPTEVFOR, 533 lawson@cotg.navy.mil	**COMM:** (757) 444-5087 ext. 3354 **DSN:** 564-5087 ext. 3354 **FAX:** (757) 444-3820
CAPT Robert Holland Deputy Assistant, Chief of Naval Personnel for Distribution NAVPERSCOM, PERS-4B p4b@persnet.navy.mil	**COMM:** (901) 874-3529 **DSN:** 882-3529 **FAX:** (901) 874-2606
CDR David Nelson Branch Head, Aviation Enlisted Assignments NAVPERSCOM, PERS-404 p404@persnet.navy.mil	**COMM:** (901) 874-3691 **DSN:** 882-3691 **FAX:** (901) 874-2642
CDR Rose Wynne Aviation Department Head NAVMAC, 30 rosemary.wynne@navy.mil	**COMM:** (901) 874-6218 **DSN:** 882-6218 **FAX:** (901) 874-6471
ATCS Anthony Malenky NTSP Coordinator NAVMAC, 32 anthony.malenky@navy.mil	**COMM:** (901) 874-6434 **DSN:** 882-6434 **FAX:** (901) 874-6471
Ms. Susan Webb NTSP Coordinator NAVMAC, 30 susan.webb@navy.mil	**COMM:** (901) 874-6242 **DSN:** 882-6242 **FAX:** (901) 874-6471
Mr. Brett Hollowell NETC/NPDC NTSP Coordinator NPDC, N7 brett.hollowell@cnet.navy.mil	**COMM:** (757) 444-2269 ext. 3225 **DSN:** 564-2269 ext. 3225 **FAX:** (757) 445-8082
Mr. Steve Berk NETC NTSP Distribution NETC, ETS-23 stephen-g.berk@cnet.navy.mil	**COMM:** (850) 452-8919 **DSN:** 922-8919 **FAX:** (850) 452-4853
CDR Janet Wiley Aviation Technical Training CNATT, FID N51 cdr-janet.wiley@cnet.navy.mil	**COMM:** (850) 452-7145 **DSN:** 922-7146 **FAX:** (850) 452-7149
ATCS Royce McKie PQS Development Group Production Officer NETPDTC, N741 atcs-royce.mckie@cnet.navy.mil	**COMM:** (850) 452-1001 ext. 2238 **DSN:** 922-1001 ext. 2238 **FAX:** (850) 452-1764

PART VII - POINTS OF CONTACT

NAME / FUNCTION / ACTIVITY, CODE / INTERNET EMAIL	TELEPHONE NUMBERS
ITCS Wayne Killingsworth PQS Development Group LCPO NETPDTC, N741 itcs-wayne.killingsworth@cnet.navy.mil	**COMM:** (850) 452-1001 ext. 2030 **DSN:** 922-1001 ext. 2030 **FAX:** (850) 452-1764
ATC Jeff Dimberg F/A-18E/F Training Coordinator NAMTRAGRU ATC-jeffrey.v.dimberg@cnet.navy.mil	**COMM:** (559) 998-2629 **DSN:** **FAX:**
CDR Michael Dunkle Maintenance Officer VFA-122 dunkle.michael@lemoore.navy.mil	**COMM:** (559) 998-2407 **DSN:** **FAX:**
Mr. F. Joe Garner CALS IETMS Program Naval Surface Warfare Center, Carderock Div., 20 garnerfj@nswccd.navy.mil	**COMM:** (301) 227-1533 **DSN:** 227-1237 **FAX:**
Mr. Phil Szczyglowski Manpower and Training Analysis Division Head NAVAIR, AIR 3.2.6 philip.szczyglowski@navy.mil	**COMM:** (301) 757-8280 **DSN:** 757-8280 **FAX:** (301) 342-7737
Mr. Bob Kresge NTSP Manager NAVAIR, AIR 3.2.6 robert.kresge@navy.mil	**COMM:** (301) 757-1844 **DSN:** 757-1844 **FAX:** (301) 342-7737
ATC Jeff Rocheteau NTSP Analyst NAVAIR, AIR 3.2.6 robert.rocheteau@navy.mil	**COMM:** (301) 757-8292 **DSN:** 757-8292 **FAX:** (301) 342-7737