PROPSED

NAVY TRAINING SYSTEM PLAN

FOR THE

AIM-120 ADVANCED MEDIUM RANGE

AIR-TO-AIR MISSILE

N88-NTSP-A-50-8111D/A

AUGUST 2003

AIM-120 ADVANCED MEDIUM RANGE AIR-TO-AIR MISSILE

EXECUTIVE SUMMARY

The Advanced Medium Range Air-to-Air Missile (AMRAAM) program was established as a result of Joint Service Operational Requirement for an Advanced Air-to-Air Tactical Missile needed in the post-1985 time frame. AMRAAM is managed as a joint Air Force and Navy program. The Air Force, as executive service, established a Joint System Program Office (JSPO) at Air Force Material Command/Aeronautical Systems Center, Eglin Air Force Base, Fort Walton Beach, Florida. The JSPO is headed by the Air Force Deputy for AMRAAM (Code ASC/YA) and an on-site Navy AMRAAM Program Manager, Air (PMA259). AMRAAM is currently in the Production, Fielding/Deployment and Operational Support Phase of the Weapon System Acquisition Process. Air Force Initial Operating Capability (IOC) was declared in September 1991. Navy IOC was completed in September 1993.

Presently, there are three series of AMRAAM: AIM-120A, AIM-120B, and AIM-120C. The AIM-120A is a non-reprogrammable missile, while the AIM-120B/C are reprogrammable through the missile umbilical using the Common Field-Level Memory Reprogramming Equipment. The AIM-120C has smaller aerosurfaces to enable internal carriage on the Air Force F-22 aircraft. Pre-Planned Production Improvement (P^3I) block upgrades are denoted on the AIM-120C missiles using a dash number, e.g., AIM-120C-6.

Testing was accomplished in a combined Developmental Test and Evaluation and Initial Operational Test and Evaluation program. Successful operational testing on the F/A-18C/D aircraft was conducted by Commander Operational Test and Evaluation Force during fiscal year (FY) 94 and included an evaluation of the missile system's effectiveness and suitability, maintainability, and supportability in the Navy operational environment.

The AMRAAM Training Program consists of initial training for instructors and follow-on training for operators and maintenance personnel. Initial training for All-Up-Round (AUR) loading, handling, processing and LAU-127A/A launcher operation and maintenance was provided by Naval Air Warfare Center Weapons Division (NAWCWD), Point Mugu, California in FY93. Refresher training for AUR loading, handling, processing and LAU-127A/A launcher operation and maintenance was provided by NAWCWD, China Lake, California in FY95. Raytheon provided aircrew instruction via their AMRAAM School in Tucson, Arizona through FY95. This responsibility was transitioned to the Naval Strike and Air Warfare Center (NSAWC) as part of their Strike Fighter Training Program (SFTP); however Raytheon continues to hold its three-day AMRAAM course several times per year.

AMRAAM BIT and reprogramming tasks are transitioning from mobile, deployable teams to USN/USMC Weapons Department personnel. Training equipment and initial training to support the transfer are planned in FY03.

AIM-120 ADVANCED MEDIUM RANGE AIR-TO-AIR MISSILE

TABLE OF CONTENTS

	Page
Executive Summary	i
List of Acronyms	iii
Preface	vii
PART I - TECHNICAL PROGRAM DATA	
A. Title-Nomenclature-Program	I-1
B. Security Classification	I-1
C. NTSP Principals	I-1
D. System Description	I-2
E. Developmental Test and Operational Test	I-2
F. Aircraft and/or Equipment/System/Subsystem Replaced	I-3
G. Description of New Development	I-3
H. Concepts	I-10
I. On-Board (In-Service) Training	I-31
J. Logistics Support	I-34
K. Schedules	I-39
L. Government Furnished Equipment and Contractor Furnished Equipment Training Requirements	I-39
M. Related NTSPs and Other Applicable Documents	I-39
PART II - BILLET AND PERSONNEL REQUIREMENTS	II-1
PART III - TRAINING REQUIREMENTS	III-1
PART IV - TRAINING LOGISTICS SUPPORT REQUIREMENTS	IV-1
PART V - MPT MILESTONES	V-1
PART VI - DECISION ITEMS/ACTION REQUIRED	VI-1
PART VII - POINTS OF CONTACT	VII-1

AIM-120 ADVANCED MEDIUM RANGE AIR-TO-AIR MISSILE

LIST OF ACRONYMS

AFB	Air Force Base
AFD	Arm/Fire Device
AIMD	Aircraft Intermediate Maintenance Department
AMIST	Aviation Maintenance In-Service Training
AMRAAM	Advanced Medium Range Air-to-Air Missile
AMTCS	Aviation Maintenance Training Continuum System
AO	Aviation Ordnanceman
ASC	Aeronautical Systems Center
AT	Aviation Electronics Technician
AUR	All-Up-Round
BIT	Built-In-Test
CAI	Computer Aided Instruction
CANTRAC	Catalog of Navy Training Courses
CATM	Captive Air Training Missile
CBT	Computer Based Training
CCRV	Captive Carry Reliability Vehicle
CD-ROM	Compact Disk-Read Only Memory
CFMRE	Common Field-level Memory Reprogramming Equipment
CIN	Course Identification Number
COMLANTFLT	Commander U.S. Atlantic Fleet
COMPACFLT	Commander U.S. Pacific Fleet
CMC	Commandant of the Marine Corps
CMI	Computer Managed Instruction
CNATT	Center for Naval Aviation Technical Training
CNO	Chief of Naval Operations
COMNAVAIRESFOR	Commander, Naval Air Reserve Force
CV/CVN	Aircraft Carrier
CWTPI	Conventional Weapon Technical Proficiency Inspection
DOP	Designated Overhaul Point
EOD	Explosive Ordnance Disposal
FMS	Foreign Military Sales

AIM-120 ADVANCED MEDIUM RANGE AIR-TO-AIR MISSILE

LIST OF ACRONYMS

FREST	Fleet Replacement Enlisted Skills Training
FRS	Fleet Replacement Squadron
FY	Fiscal Year
GFE	Government Furnished Equipment
HSI	Human Systems Integration
ICW	Interactive Courseware
IM	Insensitive Munitions
IMSD	Inventory Management and Systems Division
JILSP	Joint Service Integrated Logistics Support Plan
JRB	Joint Reserve Base
JSD	Joint Services Depot
JSPO	Joint System Program Office
MALS	Marine Aviation Logistics Squadron
MATMEP	Marine Aviation Training Management Evaluation Program
MCAS	Marine Corps Air Station
MCCDC	Marine Corps Combat Development Command
MOS	Military Occupational Specialty
MRL	Missile Rail Launcher
MTIP	Maintenance Training Improvement Program
MTU	Maintenance Training Unit
NA	Not Applicable
NAMTRAGRUDET	Naval Air Maintenance Training Group Detachment
NAMTRAMARU	Naval Aviation Maintenance Training Marine Corps Unit
NAMTRAU	Naval Aviation Maintenance Training Unit
NAS	Naval Air Station
NATOPS	Naval Air Training and Operating Procedures Standardization
NAVAIR	Naval Air Systems Command
NAVSCOLEOD	Naval Explosive Ordnance Disposal School
NAVICP	Naval Inventory Control Point
NAWCWD	Naval Air Warfare Center Weapons Division

AIM-120 ADVANCED MEDIUM RANGE AIR-TO-AIR MISSILE

LIST OF ACRONYMS

NAWMU	Naval Airborne Weapons Maintenance Unit
NCEA	Non-Combat Expenditure Allocation
NEC	Navy Enlisted Classification
NETC	Naval Education and Training Command
NSAWC	Naval Strike and Air Warfare Center
NTSP	Navy Training System Plan
NWS	Naval Weapons Station
OOLD	Out-Of-Line Device
OPNAV	Office of the Chief of Naval Operations
OPNAVINST	OPNAV Instruction
OPO	OPNAV Principle Official
PEST	Practical Explosive Ordnance Disposal System Trainer
PICA	Primary Inventory Control Activity
PMA	Program Manager, Air
P^3I	Pre-Planned Product Improvement
PSMP	Product Support Management Plan
RF	Radio Frequency
RFT	Ready For Training
RSP	Render Safe Procedures
SAF	Safe and Arm Fuze
SFTI	Strike Fighter Tactics Instructor
SFTP	Strike Fighter Training Program
SFTS	Strike Fighter Training System
SFWS	Strike Fighter Weapons School
SFWSL	Strike Fighter Weapons School Atlantic
SFWSP	Strike Fighter Weapons School Pacific
SFWT	Strike Fighter Weapons and Tactics
SICA	Secondary Inventory Control Activity
SIST	Serviceable-In-Service-Time
TBD	To Be Determined
TD	Training Device
TDD	Target Detection Device
TIVS	Thermally Initiated Venting System

AIM-120 ADVANCED MEDIUM RANGE AIR-TO-AIR MISSILE

LIST OF ACRONYMS

TM	Technical Manual
T&R	Training and Readiness (matrix)
TOFT	Tactical Operational Flight Trainer
TTE	Technical Training Equipment
USAF	United States Air Force
USMC	United States Marine Corps
USN	United States Navy
WCU	Weapons Control Unit
WDU	Weapons Detonation Unit
WGU	Weapons Guidance Unit
WPU	Weapons Propulsion Unit
WSO	Weapon and Sensor Officer
WTT	Weapon and Tactics Trainer

AIM-120 ADVANCED MEDIUM RANGE AIR-TO-AIR MISSILE

PREFACE

This Approved Navy Training System Plan (NTSP) has been prepared to update the AIM-120 Advanced Medium Range Air-to Air Missile (AMRAAM) Navy Training Plan, A-50-8111C, dated June 1998. The update of this document was accomplished through a thorough review of the life-cycle manpower, personnel, and training requirements associated with the AMRAAM program.

The major changes and updates to this NTSP consist of:

PART I: Updated information to include the Air-launched, Aerial-Intercept Guided Missile (AIM) design series AIM-120C/4/5/6/7 and intermediate maintenance and training concepts to include Built-In Test (BIT) and reprogramming tasks.

PART II: Recalculated to depict current billet requirements for operational and fleet support units through FY07.

PART III: Recalculated to identify chargeable student billets through FY07.

PART IV: Updated to reflect the current requirements in training and training logistics support.

PART V: Updated to show completion of milestones and includes new milestones supporting the AIM-120C.

PART VII: Updated to reflect current Points of Contact.

PART I - TECHNICAL PROGRAM DATA

A. TITLE-NOMENCLATURE-PROGRAM

1. Nomenclature-Title-Acronym. AIM-120 Advanced Medium Range Air-to-Air Missile (AMRAAM).

2. Program Element. 0204162N and 0206138M.

B. SECURITY CLASSIFICATION

1. System Characteristics ..... Unclassified
2. Capabilities ..... Secret
3. Functions ..... Unclassified

C. NTSP PRINCIPALS

OPNAV Principal Official (OPO)
Program Sponsor ..... CNO (N78)

OPO Resource Sponsor ..... CNO (N780C9)

Marine Corps Mission Sponsor ..... CMC (ASL-30)

Developing Agency ..... PEO(T) (PMA259)

Training Agency ..... COMLANTFLT
COMPACFLT
CNATT(FID N5)
COMNAVAIRESFOR
MAWTS-1
NSAWC (N7)

Training Support Agency ..... NAVAIR (PMA205)
COMNAVAIRESFOR (N3W)

Manpower and Personnel Mission Sponsor ..... CNO (N12)
NAVPERSCOM (PERS-21, PERS-4, PERS-404)

Director of Naval Education and Training ..... CNO (N00T)

Commander, Reserve Program Manager ..... COMNAVAIRESFOR (N3W)

Marine Corps Total Force Structure ..... MCCDC (C-5352)

D. SYSTEM DESCRIPTION

The AMRAAM system includes the tactical AIM-120 missile, a dual missile (AIM-9/AIM-120) capable rail launcher (LAU-127), the CATM, telemetry configured AIM-120 missile, reusable shipping and storage containers for the All-Up-Round (AUR) and sections, peculiar support equipment, and common support equipment. The AMRAAM program is a major defense acquisition (ACAT IC), managed as a joint Air Force and Navy program. The Air Force, as executive service, established a Joint Systems Program Office (JSPO) at Air Force Materiel Command/Air Armament Center, Eglin AFB, FL, with an office symbol of AAC/YA. The JSPO is headed by the Air Force Program Director and includes an on-site Navy AMRAAM Program Manager (PMA-259).

1. Operational Uses. Presently, there are three series of the AMRAAM mission design: AIM-120A, AIM-120B, and AIM-120C. Hereafter, AMRAAM will be used when referring collectively to all AMRAAM configurations and the mission-design-series will be used when referring to specific AMRAAM configurations. AMRAAM is an all-weather, radar-guided, and all-environment missile for use on F-15, F-16, F/A-18, E/A-18G, F-22, and Joint Strike Fighter (JSF) aircraft. Interoperability with the British Sea Harrier and German F-4F aircraft has been developed. AMRAAM has also been integrated on the UK Tornado, Swedish Gripen, and Viggen. It incorporates active radar with an inertial reference unit and micro-computer system which makes the missile less dependent upon the fire control system of the host aircraft. AMRAAM offers far greater lethality than most series of the AIM-7 Sparrow, significantly improves operational capability while reducing the missile's weight and drag on aircraft performance, improves sortie generation capabilities, overall system reliability, system supportability, end game performance, performance in electronic combat, and performance in low-altitude clutter.

2. Foreign Military Sales. The Air Force, as the executive service, is responsible for Foreign Military Sales (FMS). AMRAAM is sold to approved FMS customers.

E. DEVELOPMENTAL TEST (DT) AND OPERATIONAL TEST (OT).

All AMRAAM testing is coordinated by the AMRAAM JSPO. Navy-specific testing is relegated to PMA259.

1. DT and OT Not Completed. Not Applicable (NA).

2. DT and OT Completed. Testing was accomplished in a combined Developmental Test and Evaluation and Initial Operational Test and Evaluation program. Successful USN OT on the F/A-18C/D aircraft was conducted by Commander, Operational Test and Evaluation Force during FY94. Maintainability and supportability demonstrations on the F/A-18C/D aircraft were also performed. Ground test, loading and unloading, and captive flights were also completed successfully.

3. Follow-on Test and Evaluation. The United States Marine Corps (USMC) are considering integration of AMRAAM with their AV-8BC1 aircraft. Successful integration, procurement, and introduction will impact USMC AV-8BC1 aircrew and Organizational-level maintenance personnel training curriculum.

F. AIRCRAFT AND/OR EQUIPMENT/SYSTEM/SUBSYSTEM REPLACED.

AMRAAM is the replacement for the AIM-7, however the AIM-7 has been retained due to historically low AMRAAM procurement profiles and resulting inventory. AIM-7 sundown is planned for completion in FY10.

G. DESCRIPTION OF NEW DEVELOPMENT

1. Functional Description

a. Missile. AMRAAM is a supersonic, air launched, aerial intercept, guided missile employing active radar target tracking, proportional navigation guidance, and active Radio Frequency (RF) target detection. It employs active, semi-active, and inertial navigational methods of guidance to provide an autonomous launch and leave capability against single and multiple targets in all environments. During free flight, the missile is able to receive telemetry targeting data from the host aircraft. This data is used by the missile to identify the target in lieu of using active methods to acquire the target.

AMRAAM consists of four major sections: Guidance, Armament, Propulsion and Control. The missile has mounted externally: four wings, four fins (control surfaces) and a wiring harness cover with a Thermally Initiated Venting System (TIVS).

AIM-120A missiles, Lots 1-5, (and some in Lot 6) are non-reprogrammable and require a hardware change to upgrade the software. Lots 1-3 missiles do not have TIVS harness covers and are used by the AF only.

AIM-120B missiles, Lots 6-7, are reprogrammable through the missile umbilical using the Common Field-Level Memory Reprogramming Equipment (CFMRE) or Guided Weapons Test Station with the AUR Test Program Set. The AF AUR containers are configured with an internal cable, which enables the missiles to be reprogrammed through the container. The Navy containers are not equipped with cables, and the container must be opened to reprogram the missiles.

AIM-120C missiles, Lots 8-15 delivered or on contract with Lots 16-21 planned for future contracts. The AIM-120C is reprogrammable and is a compressed carriage configuration. These missile designs are upgraded using the block upgrade concept. Missile configurations are identified as AIM-120C, C-4, C-5, C-6, and C-7.

All AMRAAM variants are currently approved for use on the F/A-18+ aircraft. Only the AIM-120C will be approved for use on the F/A-18E/F and EA-18G aircraft.

(1) Guidance Section, Weapons Guidance Unit. The Weapons Guidance Unit (WGU) consists of the radome, seeker, servo, transmitter-receiver, electronics unit, Inertial Reference Unit, Target Detection Device (TDD), the harnesses, and frame structure. All units except the TDD are contained within a sealed structure composed of the pyroceramic radome, titanium skin sections, and aluminum aft bulkhead. The TDD, RF and video processor, and the antennas are attached to the aft skin section as a complete testable assembly. Electronics group functions include radar signal processing, seeker servo control, and all of the computations performed in the central data processor. The WGU-16B is used on AIM-120A missiles, the WGU-41/B is used on AIM-120B missiles, and the WGU-44/B is used on AIM-120C missiles. Guidance sections on AIM-120B and AIM-120C missiles contain Electronic Erasable Programmable Read Only Memory which allow reprogramming of the missile software. Missile software versions are denoted by Tape and Revision Numbers, e.g., Tape 7 Revision 25.

(2) Armament Section, Weapons Detonation Unit. The Weapons Detonation Unit (WDU)-33/B forms an integral part of the tactical missile airframe and includes the warhead, the FZU-49/B (modified Mk 3 Mod 5) safe-arm fuze device, and the Mk 44 Mod 1 booster. The armament section also includes the forward missile hook and hanger. The WDU-33/B warhead meets the Insensitive Munitions (IM) program requirements. The enhanced warhead (WDU-41/B) was introduced in Lot 11 (AIM-120C-4 and beyond).

(3) Propulsion Section, Weapons Propulsion Unit. The Weapons Propulsion Unit (WPU)-6/B consists of an airframe, integral rocket motor, a blast tube and exit cone, and an Arm/Fire Device (AFD) with a visible safe-arm indicator. The high performance rocket motor utilizes a reduced smoke, hydroxyl terminated, polybutadiene propellant in a boost sustain configuration, an asbestos-free insulated case (an integral part of the airframe), and an integral aft closure, blast tube, and nozzle assembly with a removable exit cone to facilitate control section installation/removal. Wings are attached in wing sockets at the forward end of the propulsion section. Provisions are included within this section for mounting the filter rectifier assembly. The filter rectifier assembly, mounted at the forward end of the propulsion section, provides the conversion of aircraft power required by the missile.

The propulsion section (with TIVS) meets the fast cook-off and sympathetic detonation requirements of the IM program and the policy delineated in OPNAVINST 8010.13B. The other requirements (bullet impact, fragment impact, and slow cook-off) have not been met with the current configuration. Presently, the AIM-120 has been granted the associated waivers for shipboard use. An extended length (+5 inches) rocket motor, WPU-16, was incorporated in Lot 12 production (AIM-120C-5 and beyond).

(4) Control Section, Weapons Control Unit. The Weapons Control Unit (WCU)-11/B consists of four independently controlled electro-mechanical servo actuators,

four lithium-aluminum batteries connected in parallel, and a steel fuselage section that is bolted to the propulsion section aft skirt. Each actuator consists of a brushless DC motor ballscrew, an infinite resolution potentiometer directly coupled to the output shaft, and pulse width modulated control electronics. The output shaft is engaged directly to a squib actuated lock so that it does not interfere with the fin (control surface) installation and removal. The WCU-28/B control section (Shortened Control Actuator Section) was introduced in Lot 12 (AIM-120C-5 and beyond). This control section is shortened to incorporate the extended rocket motor.

(5) Wiring Harness, Harness Cover, and Thermally Initiated Venting System. The wiring harness cover extends from the aft end of the guidance section to the forward end of the control section. Its primary purpose is to provide protection for the wiring harness. The main wiring harness electrically connects the umbilical connector, guidance section, and control section. The wiring harness cover, on Lot 4 missiles and beyond, also houses the TIVS. The TIVS is designed to vent rocket motor pressure in the event the missile is exposed to a fuel fire. The TIVS consists of an external thermal cord which, when ignited, triggers an Out-Of-Line Device (OOLD) that ignites a Linear Shape Charge that weakens the rocket motor, allowing the rocket motor to vent without exploding. The OOLD prevents the shaped charge from detonating should the booster in the OOLD inadvertently detonate due to causes such as high impact. The unit has an additional safety feature that causes it to "reset" within nine to thirteen units of gravity, such as the acceleration experienced during missile launch. This feature prevents the system from functioning during missile free flight so that the associated aerodynamic pressures do not inadvertently enable the TIVS and thereby degrade missile performance. An indicator is on the wiring harness cover showing the condition of the TIVS, either "ENABLE" or "DISABLE". Only TIVS equipped missiles are deployed aboard Aircraft Carriers (CV/CVN).

(6) Wing and Fin Assemblies. Wing and fin assemblies provide for flight control of the missile. The four wings are detachable, stationary flight surfaces with ball fasteners to facilitate quick installation and removal. The four fins provide the movable control surfaces. The AIM-120C has "clipped" wings and fins which are not interchangeable with AIM-120A and AIM-120B missiles. The AIM-120C utilizes "clipped" wings and fins in order to meet the internal carriage requirements of the F-22.

(7) Other Missile Components. Other components of the AMRAAM missile include a buffer connector, data link antenna receiver and boattail. The buffer connector, also referred to as the connector adapter, provides an electrical interface between missile and launcher. The data link receiver includes an antenna and processor which provides for receiving target update data from the launch aircraft. The boattail is a fairing that encloses the aft end of the propulsion section.

b. Other Missile Configurations. Other AMRAAM configurations include telemetry missiles and Captive Air Training Missiles (CATMs).

(1) Airborne Instrumentation Unit (AIU) Telemetry Missile. The tactical missile may be configured into a telemetry missile by replacing the armament section and tactical wiring harness with an AIU and telemetry wiring harness. This telemetry configuration is utilized by Air Force, Navy and Foreign military customers. The AIU telemetry section is form and fit interchangeable with the armament section of tactical missiles. It provides airborne telemetry and flight termination functions. It also gathers and transmits missile performance data during ground test, captive carry and launch operations. The AIU includes a tracking transponder and a telemetry data link secured by the means of an encryption device and a Flight Termination System (FTS).

(2) Non-Developmental Item Airborne Instrumentation Unit (NDI-AIU) Telemetry Missile. The NDI-AIU will replace the WRTTM (AF use only) and AIU for telemetry missiles. The NDI-AIU is form and fit interchangeable with the tactical missile armament section and provides telemetry, radar tracking augmentation (by means of a radar transponder) and the radio receivers for range safety flight termination. This unit is the next generation telemetry unit incorporating current electronics technology. The modular design improves produceability, thereby increasing reliability and reducing manufacturing cost. The unit will have two redundant flight termination transponders that are field replaceable for re-certification, thus eliminating the need to return the entire unit for certification. The unit is expandable allowing the insertion of GPS capability in the future.

(3) Captive Air Training Missiles. The AMRAAM CATM 120A/B/C is a flight-certified structural replica of the tactical missile and is ballasted to replicate weight and center of gravity. As with the tactical missile, the CATM includes four wings, four fins, and a buffer connector. The CATM has no internal electrical components, except for a jumper wire which provides "MISSILE PRESENT" indication on the F-15 and F-16 aircraft. The CATM is used to support load crew training for both services and may be captive carried on US aircraft to support aircrew training or simulated operational requirements. The CNU-555/E is used by the Navy to ship/store the CATM. The CATM and tactical missile fins are not interchangeable.

All US CATM-120A have been converted to the CATM-120B configuration. An AMRAAM CATM-120B is identical to the CATM-120A with the exception of its radome shape. The CATM-120B radome is a blunt-nosed configuration. The CATM-120C replicates the compressed carriage characteristics of the AIM-120C missile and maintains the blunt-nosed configuration of the CATM-120B.

(4) Captive Carry Reliability Vehicle. The AMRAAM Captive Carry Reliability Vehicle (CCRV) is a tactical missile with inert armament and propulsion sections. It is used at SFWSL and SFWSP for the AMRAAM CWTPI because it allows post-load BIT to complete the AMRAAM loading checklist.

c. Launchers. The AMRAAM system includes three Missile Rail Launchers (MRLs): the LAU-127A/A, in conjunction with the LAU-115, used on the F/A-18+ aircraft; the

LAU-128A/A, and the LAU-129A/A, used on the F-15 and F-16 aircraft, respectively. Additional interface cables are not required between the aircraft and the launcher. The LAU-127A/A can be installed and operated at all current AIM-9 Sidewinder positions on the F/A-18C/D/E/F except F/A-18+ wing tip stations. The LAU-127A/A is also capable of launching AIM-9 Sidewinder missiles. The LAU-127A/A supplements the Sidewinder launchers (except F/A-18+ wing tip) on AMRAAM capable aircraft.

The LAU-116 eject launchers were modified to include the interface functions necessary for AIM-120 eject launch. The LAU-116 are installed on F/A-18 "cheek" stations.

d. Containers. The AMRAAM is transported and stored in an AUR container designed to package up to four missiles including the wings, fins and buffer connectors. Each service has unique AUR containers to meet its specific requirements. The Navy AUR CNU-415A/E, CNU-415B/E, and CNU-415C/E container stores the wings, fins and buffer connectors in a center compartment under the missiles. The missiles are oriented nose-to-tail to meet shipboard IM requirements. The CNU-415A/E, B/E, C/E AUR containers are supported by shipboard support equipment, such as the HLU 216A/E Hoisting Beam and the MK45 Mod 2 Handlift Truck. The container is transportable on land using the Navy AERO-51C and the USMC A/M32K-4A, Rough Terrain Trailer. The CNU-415A/E was reconfigured into a CNU-415B/E. The CNU-415B/E is being modified into the CNU-415C/E that has container interlocking capability thus deleting the requirement for banding the containers in a unit load.

The AUR CNU-555/E Navy container stores AUR CATM missiles, wings, fins and buffer connectors. It is the same container as the CNU-415A/E and B/E versions, but contains radome blocks compatible with the CATM's blunt nose. The CNU-555/E is being modified to include the interlocking capability.

There are two containers for individual storage of wings and fins. The CNU-452/E can package four wings and four fins for AIM-120A/B. but is non-procurable and obsolete. The CNU-452A/E can package four wings and fins for AIM-A/B/120C.

e. Common Field Level Memory Reprogramming Equipment. The Common Field Level Memory Reprogramming Equipment (CFMRE) is special test equipment used to perform AIM-120 BIT and to reprogram AIM-120B and AIM-120C missiles out of the container, or up to four missiles in or out of the Air Force AUR container. The CFMRE (AN/GYQ-75A(V)) is comprised of an Interface Adapter Unit, Computer/Controller Assembly, and a Cable Case Assembly.

f. Follow-on CFMRE. AMRAAM P^3I has driven new requirements for reprogramming. A decision will be made whether to replace the current CFMRE with a "new start" CFMRE or change to the "improved" Common Munitions BIT Reprogramming Equipment (CMBRE). Technical analysis for the decision is due from Raytheon, and based on that information, the AMRAAM Management Team determine which system will replace the

current CFMRE. A decision is anticipated by 30 September 2003. Once the decision is made, this NTSP will be updated to reflect the appropriate BIT/reprogramming equipment chosen.

2. Physical Description. AMRAAM has the physical properties listed below. Four wings, four fins (control surfaces), and the wiring harness cover are mounted externally, providing additional distinguishing features from other similar missiles, such as AIM-7 Sparrow. The AIM-120C utilizes "clipped" wings and fins in order to meet the internal carriage requirements of the F-22.

Table I-1. AMRAAM Leading Particulars.

Length	144.0	inches
Diameter	7.0	inches
Wing Span	21.0	inches*
Wing Span	19.0	inches**
Fin Span	25	inches*
Fin Span	19	inches**
Weight	348.1	pounds***
Weight	356.0	pounds****

* AIM-120A and AIM-120B
** AIM-120C
*** AIM-120A, AIM-120B and AIM-120C through AIM-120C-4
**** AIM-120C-5 and AIM-120C-6

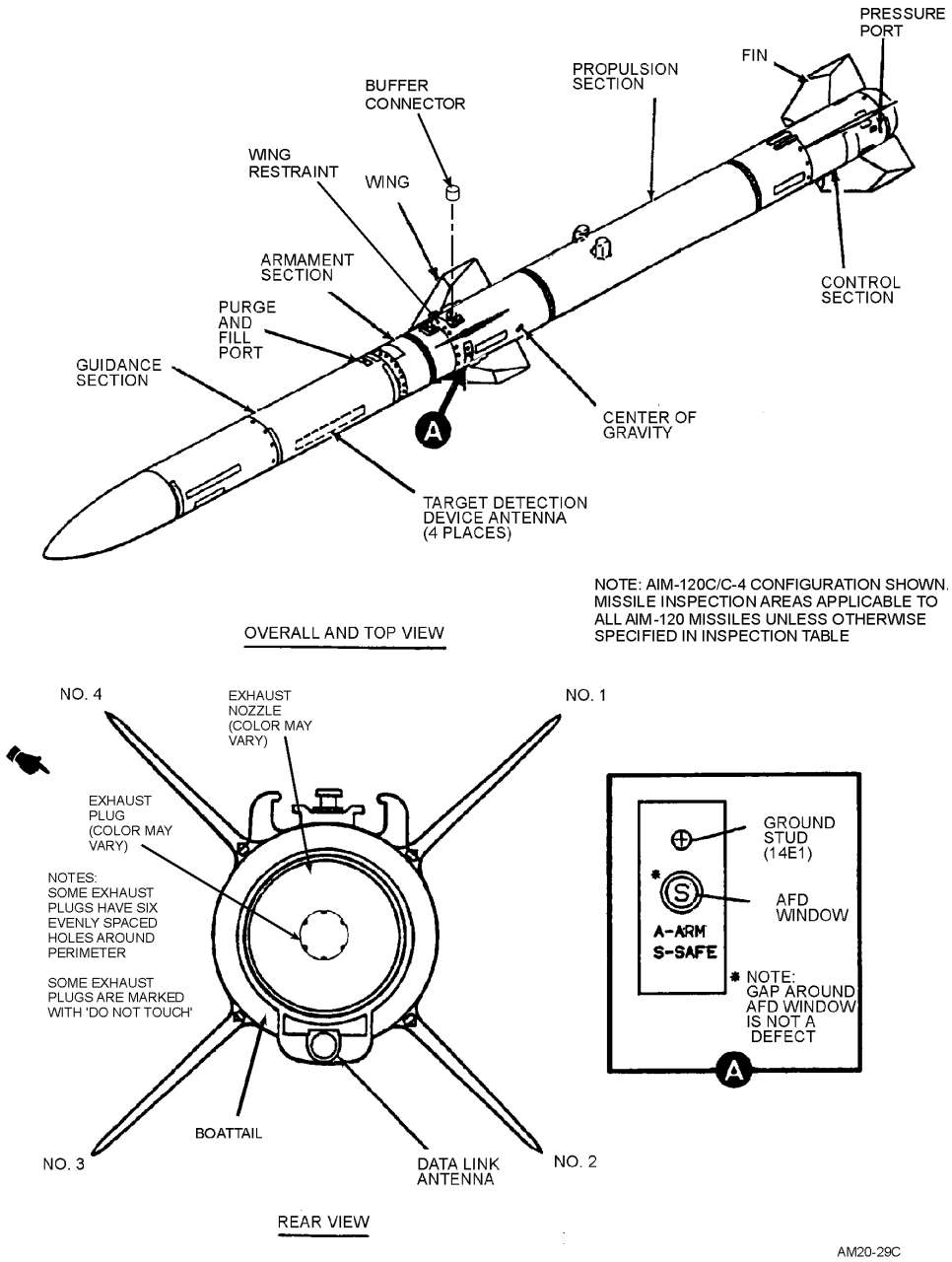

Figure I-1. AMRAAM AIM-120C

3. New Development Introduction. AMRAAM was introduced through new production. The Navy began receiving AIM-120A deliveries in 1991, but delayed Fleet introduction until integration with the F/A-18 aircraft was completed in 1993. Fleet introduction coincided with F/A-18 IOC when CV/CVN load-outs began to include AIM-120A. AIM-120B

deliveries began in FY 94, and AIM-120C deliveries began in FY 96. AMRAAM Pre-Planned Product Improvement (P^3I) missile deliveries began in FY-00 (AIM-120C-3) and continue through FY-12.

4. Significant Interfaces.

(1) AMRAAM to Launcher. Power for Built-In-Test (BIT) of the pre-launch dormant missile is provided by converting aircraft power in the AMRAAM Electronic Control Unit. The filter rectifier assembly is mounted at the forward end of the missile propulsion section and provides the conversion of aircraft power required by the missile. Prior to launch, signal and data transfer between missile and aircraft is accomplished through a buffer connector that is in-line between the launcher cable and the missile umbilical connector. Approved USN/USMC launchers include the LAU-127 and the LAU-116.

(2) AMRAAM to CFMRE. The AN/GYQ-75A(V), also known as CFMRE, interfaces with AMRAAM using the buffer connector and the missile umbilical connector, and supplies the power in lieu of the aircraft for off-aircraft BIT and reprogramming operations.

(3) AMRAAM to Container. USN/USMC AUR containers include the CNU-415A/E, B/E, C/E (tactical missiles) and the CNU-555/E (CATMs).

5. New Features, Configurations, or Material. Since the last release of the AMRAAM NTSP, the AIM-120C-4/-5/-6 configurations have been released for Fleet issue. The AIM-120C-4 introduced the new AMRAAM warhead with increased lethality. The AIM-120C-5 introduced the new AMRAAM propulsion section and control actuation section that yielded improved range performance. The propulsion section was lengthened to accommodate a longer rocket motor, while the control actuation section was shortened to keep the overall length of the missile the same. The AIM-120C-6 introduced a new TDD.

H. CONCEPTS

1. Operational Concept. AMRAAM is employed by the aircrew of F/A-18+/E/F and EA-18G aircraft, and in the future, will be employed by the aircrew of JSF aircraft. It is used in air-to-air combat evolutions against enemy aircraft and cruise missiles. The host aircraft radar, missile radar, and data link are used to acquire and track single or multiple targets. With the introduction of the Joint Helmet Mounted Cueing System (JHMCS) and the release of AMRAAM Tape 7 Revision 25, aircrew will be able to use the JHMCS to acquire targets in the high off-boresight regime.

2. Maintenance Concept. Maintenance of AMRAAM employed on various aircraft is accomplished using the basic maintenance philosophy outlined in OPNAVINST 4790.2 (series), and specific weapons maintenance instructions outlined in OPNAVINST 8000.16 (series).

a. Organizational-level.

(1) Navy.

(a) Aviation Ordnance. Squadron personnel with the Aviation Ordnanceman (AO) rating perform organizational-level maintenance for air-launched weapons. AOs with Navy Enlisted Classification (NEC) 8342 and 8842 perform organizational-level maintenance for air-launched weapons on the F/A-18+ model aircraft, while AOs with NEC 8341 and 8841 perform organizational-level maintenance for air-launched weapons on the F/A-18E/F and EA-18G model aircraft. These squadron AOs are part of Work Center 230. AMRAAM organizational-level maintenance consists of performing (see OPNAVINST 8000.16 Volume 2, Figure 1-2-1 and 7-2-2):

- Aircraft Armament Equipment (AAE) preparation/inspection
- Aircraft weapons release and control systems checks,
- Return launcher to AIMD,
- Missile visual inspection for damage and corrosion,
- Missile cleaning of external surface and corrosion control,
- Remove and install protective devices,
- Visual inspection of missile launcher assembly interface,
- Uploading and downloading missile on aircraft,
- Attaching wings and fins,
- Missile BIT checks via aircraft avionics.

(b) Aviation Electronics. In most cases on the F/A-18 aircraft, Aviation Electronics Technicians (ATs) perform aircraft weapons release and control systems checks. ATs with NEC 8342 and 8842 perform weapons release and control systems checks for air-launched weapons on the F/A-18+ aircraft, while ATs with NEC 8341 and 8841 perform weapons release and control systems checks for air-launched weapons on the F/A-18E/F and EA-18G aircraft. In some squadrons, the Integrated Weapons Team (IWT) concept is used, and in those cases AOs may perform aircraft weapons release and control systems checks. The AN/AWM-54 Aircraft Firing Circuit Test Set is used to test for stray voltage in aircraft weapons circuits prior to loading ordnance. The AN/AWM-96 Aircraft Weapons Control Test Set is used to test the functionality of the aircraft weapons circuit prior to loading AMRAAM.

(2) Marine Corps.

(a) Aviation Ordnance. Squadron personnel with the AO rating perform organizational-level maintenance for air-launched weapons. USMC AO personnel with Military Occupational Specialty (MOS) 6531 perform organizational-level maintenance for air-

launched weapons on the F/A-18 aircraft. AMRAAM organizational-level maintenance consists of performing (see OPNAVINST 8000.16 Volume 2, Figure 1-2-1 and 7-2-2):

- AAE preparation/inspection
- Aircraft weapons release and control systems checks,
- Return launcher to MALS,
- Missile visual inspection for damage and corrosion,
- Missile cleaning of external surface and corrosion control,
- Remove and install protective devices,
- Visual inspection of missile launcher assembly interface,
- Uploading and downloading missile on aircraft,
- Attaching wings and fins,
- Missile BIT checks via aircraft avionics.

b. Intermediate-level.

(1) Navy.

(a) Air Launched Weapons. Weapons Department personnel with the AO rating and NEC 6801 perform intermediate-level maintenance for air-launched weapons. AMRAAM and CATM intermediate-level maintenance is accomplished ashore and afloat. Station Weapons personnel will perform AMRAAM and CATM intermediate-level maintenance tasks ashore on Naval Air Stations (NAS). Weapons Department personnel (G3 Division) perform AMRAAM and CATM intermediate-level maintenance tasks aboard USN aircraft carriers (CV/CVN). These Weapons Department personnel are part of Work Center 700. AMRAAM and CATM intermediate-level maintenance consists of (see OPNAVINST 8000.16 Volume 2, Figure 1-3-1):

- Storing and handling AUR missiles and AUR containers using support equipment,
- Unpacking and packing AUR missiles,
- Performing visual inspections of AUR missiles and AUR containers,
- Delivering missile to flight line/flight deck,
- Missile BIT checks via the AN/GYQ-75A(V) CFMRE
- Loading (reprogramming) missile software using CFMRE
- Cleaning and corrosion control of AUR missiles,
- Preservation and painting,

- Removing and replacing specified parts of AUR missiles and AUR containers,
- Record keeping/reporting.

AMRAAM reprogramming capability is planned ashore and aboard aircraft carriers using the AN/GYQ-75A(V) CFMRE. Originally, this task was performed by tiger teams sent out by the program office. Software updates occur approximately every two years. AMRAAM missile software is classified and requires proper handling during BIT/reprogramming operations.

(b) Strike Armament. AIMD personnel with the AO rating and NEC 6802 perform intermediate-level maintenance on the aircraft launchers. Intermediate-level maintenance for the LAU-116A/A and LAU-127A/A is accomplished ashore at NAS and afloat aboard USN CV/CVN. Strike armament intermediate-level maintenance, with respect to AMRAAM capable launchers, consists of (see OPNAVINST 8000.16 Volume 2, Figure 7-3-2):

- Storing, handling, and issuing launchers,
- Performing visual inspections,
- Removing and replacing replaceable assemblies,
- Testing launchers using A/E37T-35 CRALTS.

(2) Marine Corps.

(a) Air Launched Weapons and Launchers. MALS personnel with the AO rating and MOS 6541 perform intermediate-level maintenance for air-launched weapons and aircraft launchers. AMRAAM, CATM, and related launcher intermediate-level maintenance will be accomplished ashore at Marine Corps Air Stations (MCAS). AMRAAM, CATM and aircraft launcher intermediate-level maintenance consists of (see OPNAVINST 8000.16 Volume 2, Figure 1-3-1 and 7-3-2):

- Storing and handling AUR missiles and AUR containers using support equipment,
- Unpacking and packing AUR missiles,
- Performing visual inspections of AUR missiles and AUR containers,
- Delivering missile to flight line/flight deck,
- Missile BIT checks via the AN/GYQ-75A(V) CFMRE
- Loading (reprogramming) missile software using CFMRE
- Cleaning and corrosion control of AUR missiles,
- Preservation and painting,

- Removing and replacing specified parts of AUR missiles and AUR containers,
- Record keeping/reporting.
- Storing, handling, and issuing launchers,
- Performing visual inspections,
- Removing and replacing replaceable assemblies,
- Testing launchers using A/E37T-35 CRALTS.

AMRAAM reprogramming capability is planned ashore and aboard aircraft carriers using the AN/GYQ-75A(V) CFMRE. Originally, this task was performed by tiger teams sent out by the program office. Software updates occur approximately every two years. AMRAAM software is classified and requires proper handling during BIT/reprogramming operations.

c. All-Up-Round Depot-level. Effective in Lot 12 (April 1998), Raytheon assumed Total System Performance Responsibility (TSPR), which includes all activities necessary to design, produce, warrant, and sustain the missile and to perform engineering and support tasks for non-missile system items. This overall scope of responsibility is referred to as TSPR. Specific logistics responsibilities include depot repair of the missile, CFMRE, AIU, Navy CATM, and containers. Previously, NWS Yorktown, Virginia, and NWS Fallbrook, California, were the AUR depot-level maintenance activities. Raytheon's responsibility includes coordination of armament section and propulsion section repairs at the appropriate facilities.

e. Interim Maintenance. Not Applicable (NA).

f. Life-Cycle Maintenance Plan. The AMRAAM Product Support Management Plan (PSMP), document number MS-001, was last updated and approved in January 2002. Section 2.3 describes Navy maintenance planning. Serviceable-In-Service-Time (SIST) applies to USN missiles. SIST is the period of time an air launched guided missile may remain in operational use and or storage before its internal electronic and mechanical components require mandatory tests or maintenance actions to validate suitability for further operational use. Each USN AUR has a maintenance due date consisting of the calendar month and year that the SIST expires. SIST for USN assets is published in OPNAVINST 8000.16 (series), Appendix B.

3. Manning Concept. AMRAAM had no direct impact on existing manpower requirements at organizational, intermediate, or depot-level activities. F/A-18 pilot and Weapons and Sensor Officer (WSO) manpower is driven by seat factor and crew ratio. Manning for USN and USMC fleet squadrons, USMC Training Squadrons, USN Fleet Replacement Squadrons (FRS), and intermediate maintenance activities is based on the total assigned workload, not only on specific AMRAAM requirements. Maintenance skills required to support AMRAAM are considered to be within the capability of personnel holding existing NEC codes and MOS.

Indirectly, AMRAAM did impact organizational and intermediate level workloads. Pilots and WSOs now have an additional weapon system for qualification. Specifically, the Navy Squadron Training Matrices of the combined instruction COMNAVAIRPACINST 3500.67C and COMNAVAIRLANTINST 3500.63C for the F/A-18 aircraft and the Marine Corps Aviation Training and Readiness Manual (MCO P3500.15B) for the F/A-18 aircraft were used to estimate peacetime manpower requirements for AMRAAM. These instructions/orders provide annual aircrew training requirements, which include events that involve captive carry and live fire of ordnance. The F/A-18 community relies heavily on the embedded training provided by the aircraft electronics. The training events that involve AMRAAM are event numbers 18 and 21, AIM-120 Valid Shot and A/A Radar Live Shot, respectively. The AIM-120 valid shot is required five times every thirty days, using the embedded training capability of the aircraft's electronics. The air-to-air radar missile live shot is required once every three years per aircrewman, and can be satisfied by shooting AMRAAM or AIM-7 Sparrow. These AMRAAM qualification requirements are additive to other aircraft and weapon qualification events, and thus increase the workload for F/A-18 aircrewman. The increasing list of mission areas and associated weapons for the F/A-18 aircraft poses a challenge to aircrew personnel, who not only must be properly trained in theses areas, but also must retain those knowledge and skills. As older missile systems are removed from the inventory, this workload will be reduced.

Similarly, F/A-18 aviation ordnance personnel must remain qualified to handle and load AMRAAM. Conventional Weapons Technical Proficiency Inspection (CWTPI) are required regularly for squadron AOs. AMRAAM is additive to the list of other ordnance/stores that are part of the CWTPI, and thus increases the workload for F/A-18 AOs. Additionally, the fleet introduction of AMRAAM included a new launcher, the LAU-127. The addition of another launcher to the USN and USMC inventory added to the intermediate-level maintenance workload because of the inevitable preventative/corrective maintenance actions associated with the LAU-127. The increasing list of ordnance and associated launchers and support equipment poses a challenge to AO personnel, who not only must be properly trained in theses areas, but also must retain those knowledge and skills. As older missile systems are removed from the inventory, this workload will be reduced. Refer to Part II for existing USN and USMC maintenance manpower requirements.

a. Organizational-level Maintenance. Loading AMRAAM requires five AOs. One load crew can perform the required upload-download cycles per year for an F/A-18+/E/F and EA-18G squadron.

b. Intermediate-level Maintenance. Three AOs are required to unpack, inspect, and deliver AMRAAM to the flight line/flight deck. One team of three AOs can perform the required unpacking-packing evolutions per year to support F/A-18+/E/F and EA-18G squadrons.

c. Depot-level Maintenance. Depot-level maintenance, both AUR and component repair, is the responsibility of Raytheon. This maintenance is supported through TSPR.

4. Training Concept. The AMRAAM training concept is divided into operator and maintenance training. Operator training is provided for F/A-18 pilot and WSO personnel. The AMRAAM training concept for maintenance is divided into organizational- and intermediate-levels based on OPNAVINST 4790.2 (series) and OPNAVINST 8000.16 (series). Organizational-level maintenance training is provided to AO personnel in the F/A-18+/E/F and EA-18G community with NECs 8341, 8342, 8841, 8842, or MOS 6531. Intermediate-level training is provided to AO maintenance personnel with NECs 6801, 6802, or MOS 6541.

Selected Reserve personnel may earn intermediate level maintenance qualifications by attending formal training at Naval Air Maintenance Training Group (NAMTRAGRU) schools, providing quotas, funding, and students are available to attend the training. Specific guidelines are contained in NAVPERS 18068F Volume II, Chapter IV, Navy Enlisted Classifications.

The established training concept for most aviation maintenance training divides "A" School courses into two or more segments called Core and Strand. Many organizational level "C" School courses are also divided into separate Initial and Career training courses. "A" School Core courses include general knowledge and skills training for the particular rating, while "A" School Strand courses focus on the more specialized training requirements for that rating and a specific aircraft or equipment, based on the student's fleet activity destination. Strand training immediately follows Core training and is part of the "A" School. Upon completion of Core and Strand "A" School, graduates attend the appropriate Initial "C" School for additional specific training. Initial "C" School training is intended for students with a paygrade of E-4 and below. Career "C" School training is provided for E-5 personnel and above to enhance skills and knowledge within their field.

a. Initial Training. Initial training for the AIM-120A and AIM-120B was conducted in FY93 and FY95, respectively. Initial training for the AIM-120C was deemed unnecessary, because the only significant change was the smaller wings and fins. The smaller fins still attach with locking nuts, however, the locking nuts tighten in a counter-clockwise direction, which is the opposite direction of the locking nuts on the AIM-120A/B fins. These differences are addressed in the applicable technical manuals and checklists. AMRAAM BIT and reprogramming tasks are transitioning from mobile, deployable teams to USN/USMC Weapons Department personnel. Training equipment and initial training to support the transfer are planned to begin in FY03.

b. Follow-on Training. Follow-on training for AMRAAM is available as part of courses taught at the FRS, Strike Fighter Weapons School (SFWS) Atlantic and Pacific, Naval Strike and Air Warfare Center (NSAWC), Naval Aviation Maintenance Training Units (NAMTRAU), Naval Aviation Maintenance Training Group Detachments (NAMTRAGRUDET), and Naval Aviation Maintenance Training Marine Corps Units (NAMTRAMARU). The addition of AMRAAM into existing training tracks caused no change in student throughput or chargeable student billets. Follow-on training courses have been modified to include AMRAAM and are currently available.

(1) Operator Training. Pilots and WSOs are trained at the appropriate FRS for specific aircraft operation and weapons. Pilot and WSO skills in tactics and ordnance delivery are further enhanced at the SFWS, NSAWC, and through on-board proficiency training.

(a) Training Devices (TDs). The TDs required for follow-on and proficiency operator training include the Weapon and Tactics Trainer (WTT), TD number 2E7, and the JAIM-120 (series). The JAIM-120 (series) assets are required for live-fire exercises, which are part of the annual Non-Combat Expenditure Allocation (NCEA). Additionally, the F/A-18 aircraft includes embedded training capability using its onboard computers.

- **F/A-18 Embedded Training.** The F/A-18 (series) aircraft contains embedded training for AMRAAM, permitting simulated weapon firings without tactical or training stores loaded. The aircraft's mission computers, in conjunction with the Stores Management System, Master Arm circuit, radar and other sensors, can allow aircrew to select track files, toggle AMRAAM launch modes, simulate a missile launch, then support a simulated missile fly-out through symbology presented on the HUD and DDI. This embedded training permits the pilots to perform AMRAAM re-qualification every thirty days.

- **Weapons Tactics Trainer, 2E7.** The Weapon Tactics Trainer (WTT), TD number 2E7, is a computer-based weapon system training device developed for use by F/A-18C/D/E/F aircrews. The WTT is commonly referred to as the "dome trainer". F/A-18C/D/E/F WTTs are located at NAS Lemoore, NAS Oceana, and MCAS Miramar. They are presently concurrent with SCS 15C and 18E. The WTT provides familiarization in F/A-18C/D/E/F operational procedures and F/A-18C/D/E/F approved stores and missiles, as well as proficiency training in launch and control techniques. The F/A-18C/D WTT SCS17C updates are planned, but not funded.

- **Tactical Operational Flight Trainer.** The F/A-18C/D/E/F Tactical Operational Flight Trainer (TOFT) uses a three-panel visual system and can be networked with other TOFT. Presently, two F/A-18C/D TOFT are located at NAS Lemoore and NAS Oceana. They are presently concurrent with SCS 15C. The TOFT provides familiarization in F/A-18C/D/E/F operational procedures and F/A-18C/D/E/F approved stores and missiles, as well as proficiency training in launch and control techniques. The F/A-18+ TOFT SCS 17C updates are planned, but not funded.

- **Special Test, Air-launched, Aerial Intercept Guided Missile (JAIM).** JAIM-120A, JAIM-120B, and JAIM-120C are telemetry-configured missiles that provide the Services the ability to evaluate the capabilities of the operational forces using inventory weapons and weapons systems in a realistic environment. In these configurations, the armament section is replaced with a telemetry section that measures/records missile performance data and relays it (encrypted) to ground stations via a data link. The telemetry section also contains a tracking transponder and a flight termination system. Currently, live fire shots are being limited to eleven per year.

(b) Training Aids. The AMRAAM Interactive Courseware (ICW) is a component of the Strike Fighter Weapons and Tactics (SFWT) curricula, and is hosted on the Strike Fighter Training System (SFTS) also known as Strike Fighter On-Line. SFWT and SFTS are two of three components of NSAWC's Strike Fighter Training Program (SFTP), which is primarily targeted at providing post-FRS training to Strike Fighter aircrew. The SFTS is a high-speed, wide area network, linking schools and squadrons together with standardized, Computer-Based Training (CBT) and ICW. Strike Fighter Tactics Instructors (SFTIs), the third component of the SFTP, are trained by NSAWC N7 (Topgun) and administer the SFWT curricula within the squadrons. AMRAAM ICW was developed for the SFTS by NSAWC and NAVAIRSYSCOM PMA205 and PMA259. Initial release of the AMRAAM ICW occurred in August 1998, and was distributed via Compact Disk-Read Only Memory (CD-ROM). The ICW was converted to a web-based, SCORM-compliant format as part of the SFTS Online initiative and updated in 2001. For detailed information on AMRAAM ICW (training aid) refer to element IV.B.2.

(c) Courses. The following table lists the applicable operator training courses. AMRAAM source material has been incorporated, which caused no change in student throughput or chargeable student billets. These courses are listed for reference only and, therefore, will not appear in Parts II and III of this document. See NTP A-50-7703 for course details.

Table I-2. Operator Courses

COURSE NUMBER	COURSE TITLE	RFT DATE FOR AMRAAM
D/E-2A-0601	F/A-18 Fleet Replacement Pilot Category 1	On-line
D/E-2A-0602	F/A-18 Fleet Replacement Pilot Category 2A	On-line
D/E-2A-0604	F/A-18 Fleet Replacement Pilot Category 3A	On-line
D/E-2A-0606	F/A-18 Fleet Replacement Pilot Category 4	On-line
None	F/A-18 Strike Fighter Advanced Readiness Program	On-line
None	F/A-18 Strike Fighter Weapons Employment	On-line
None	SFWT AMRAAM Brief	On-line

COURSE NUMBER	COURSE TITLE	RFT DATE FOR AMRAAM
M13P4B3	F/A-18D Fleet Replacement Pilot Basic and Transition	On-line
M13P3V3	F/A-18D Fleet Replacement Pilot Refresher	On-line
M13P3W3	F/A-18D Fleet Replacement Pilot Modified Refresher	On-line
M13P4C3	F/A-18D WSO Basic and Transition	On-line
M13P3R3	F/A-18D WSO Refresher	On-line
M13P3S3	F/A-18D WSO Modified Refresher	On-line

(2) Initial Skills - Maintenance. AMRAAM initial skills training for the AO rating are provided by the "A" School at NAS Pensacola, Florida.

(a) TDs. The CATM-120 series is the TD required for AMRAAM initial skills maintenance training. The CATM-120 series is shipped in its own shipping container, the CNU-555/E. For detailed information on the CATM-120 series and CNU-555/E, refer to element IV.A.2.

- **Captive Air Training Missile.** The CATM-120 (series) are inert TDs that provide realistic handling characteristics when loaded in place of tactical AMRAAM; however, these training missiles have not been cleared nor certified for flight. Current F/A-18 Operational Flight Programs do not recognize the CATM-120 series and register a "LOAD X" condition.

- **CNU-555/E container.** The AMRAAM CATM AUR container is required to teach and practice unpacking/packing evolutions, as well as, container maintenance.

(b) Technical Training Equipment (TTE).

- **LAU-116A/A launcher.** The LAU-116A/A is required to teach and practice AMRAAM release and control checks, AMRAAM loading, and launcher maintenance.

- **LAU-127A/A launcher.** The LAU-127A/A is required to teach and practice AMRAAM release and control checks, AMRAAM loading, and launcher maintenance.

(c) Training Aids.

- **AMRAAM Loading & Handling ICW.** The AMRAAM Loading & Handling ICW is a self-paced software application that runs on standard PCs. It

provides AMRAAM familiarization, as well as media rich presentations of organizational and intermediate level tasks.

(d) Courses. AMRAAM source material has been incorporated into the following courses with minimal impact. The AMRAAM caused no change in student throughput or chargeable student billets, and, therefore, these courses will not appear in Parts II and III.

Table I-3 Initial Skills - Maintenance Courses

COURSE NUMBER	COURSE TITLE	RFT DATE FOR AMRAAM
C-646-2011	Aviation Ordnanceman Common Core Class A1	On-line
C-646-2012	Aviation Ordnanceman Navy Difference Training Class A1	On-line

(3) Organizational-level Maintenance. Organizational-level maintenance personnel are trained at the appropriate MTU for specific aircraft/weapon loading and maintenance. Weapon loading skills are further enhanced at SFWS, and through on-board proficiency training.

(a) TDs. TD required for follow-on and proficiency training is the AMRAAM Captive Carry Reliability Vehicle (CCRV).

- **AMRAAM CCRV.** The AMRAAM CCRV is a tactical missile with inert armament and propulsion sections. It is used at SFWSL and SFWSP for the AMRAAM CWTPI because it allows post-load BIT to complete the AMRAAM loading checklist. For detailed information on the AMRAAM CCRV, refer to element IV.A.2.

(b) TTE.

- **LAU-116A/A launcher.** The LAU-116A/A is required to teach and practice AMRAAM release and control checks, AMRAAM loading, and launcher maintenance.

- **LAU-127A/A launcher.** The LAU-127A/A is required to teach and practice AMRAAM release and control checks, AMRAAM loading, and launcher maintenance**.**

- **AN/AWM-96 Test Set.** The AN/AWM-96 is required to teach and practice AMRAAM/LAU-127 release and control checks.

- **AN/AWM-103 Test Set.** The AN/AWM-103, known as the COAST, will begin production in October 2002 at the rate of 25 per month. This launcher test set will replace several existing launcher test sets including the AN/AWM-96.

(c) Training Aids.

- **AMRAAM Loading & Handling ICW.** The AMRAAM Loading & Handling ICW is a self-paced software application that runs on standard PCs. It provides AMRAAM familiarization, as well as media rich presentations of organizational and intermediate level tasks.

(d) Courses. AMRAAM is taught in the following organizational-level maintenance training courses. AMRAAM source material was incorporated in these courses with minimal impact, and caused no change in student throughput or chargeable student billets, and, therefore, these courses will not appear in Parts II and III. See NTP A-50-7703 for organizational-level maintenance training course details.

Table I-4. Organizational-level Maintenance Courses.

COURSE NUMBER	COURSE TITLE	RFT DATE FOR AMRAAM
C-646-9973	F/A-18 Stores Management System (Initial) Organizational Maintenance	On-line
C-646-9974	F/A-18 Stores Management System (Career) Organizational Maintenance	On-line
D/E-646-0640	F/A-18 Conventional Weapons Loading	On-line
D/E-646-0647	F/A-18 Conventional Release System Test	On-line

(4) Intermediate-level Maintenance. Intermediate-level maintenance training is available for USN and USMC AOs through the appropriate Maintenance Training Unit (MTU). The addition of AMRAAM BIT and reprogramming training is driving additional TTE and training aid requirements.

(a) TDs.

- **CATM-120.** The CATM-120 series is required for follow-on and proficiency training. See I.H.4.(2)(a) for description. For detailed information on the CATM-120 series, refer to element IV.A.2.

(b) TTE.

- **CNU-555/E container.** The AMRAAM CATM AUR container is required to teach and practice unpacking/packing evolutions, as well as, container maintenance.

- **AN/GYQ-75A(V) CFMRE.** Currently, CFMRE is required to teach and practice AMRAAM BIT and reprogramming; however, new missile designs are driving BIT and reprogramming requirements that CFMRE can not support. A decision will be made whether to replace the current CFMRE with a "new start" CFMRE or change to the "improved" Common Munitions BIT Reprogramming Equipment (CMBRE). Technical analysis for the decision is due from Raytheon on 30 September 2002. Once the decision is made, this NTSP will be updated to reflect the appropriate TTE.

- **LAU-116A/A launcher.** The LAU-116A/A is required to teach and practice launcher disassembly/assembly and maintenance.

- **LAU-127A/A launcher.** The LAU-127A/A is required to teach and practice launcher disassembly/assembly and maintenance.

- **A/E37T-35 CRALTS.** CRALTS is required to teach and practice testing the LAU-116A/A and LAU-127A/A launchers.

(c) Training Aids.

- **CFMRE Embedded Training Aid.** In order to teach and practice AMRAAM BIT and reprogramming using CFMRE, the CFMRE Embedded Training Aid is used. It is an unclassified software application that resides on a PC card and simulates all the screens and interaction commensurate with performing AMRAAM BIT and reprogramming using the AN/GYQ-75A(V) CFMRE.

- **AMRAAM Loading & Handling ICW.** The AMRAAM Loading & Handling ICW is a self-paced software application that runs on standard PCs. It provides AMRAAM familiarization, as well as media rich presentations of organizational and intermediate level tasks.

(d) Courses. The following table lists intermediate-level maintenance training courses that have AMRAM source material incorporated. Detailed listings for these courses follow the table. AMRAAM caused no change in student throughput or chargeable student billets. These courses appear in Parts II, III, and IV as part of their respective tracks. For detailed information refer to element IV.A.2. The applicable MTRRs for these courses are the 700/900 Division MTRRs – one is held for each service (USN and USMC).

Table I-6. Intermediate-level Maintenance Courses.

COURSE NUMBER	COURSE TITLE	AMRAAM RFT DATE
C-122-3111	Air Launched Guided Missiles Intermediate Maintenance	On-line
C-646-3105	Aviation Ordnance Intermediate Maintenance Technician	On-line
C-646-3118	Strike Armament Systems Intermediate Maintenance	On-line
C-646-4108	Air Launched Weapons Ordnance Supervisor	On-line
C-646-4109	Weapons Department General Aviation Ordnance	On-line

Title ..... **Air Launched Guided Missiles Intermediate Maintenance**
CIN ..... C-122-3111 (part of D/E-646-7007)
Model Manager. MTU 4035, NAMTRAU NAS Whidbey Island
Description..... This course provides training to the first tour Aviation Ordnancemen, Gunner's Mates and Torpedoman's Mates, including:

- Basic theory
- Safety precautions
- Technical publications
- Missile reporting procedures

Upon completion, the student will have sufficient knowledge/theory of the Sparrow, Phoenix, Sidewinder, Sidearm, AMRAAM, Maverick, Harpoon, SLAM, HARM, Tow, Hellfire, Penguin All Up Round (AUR) Air Launched Guided Missiles, Walleye Weapon System, Tactical Air Launched Decoy (TALD) and Air Nitrogen Purifier Units to perform, under close supervision, Intermediate Maintenance in the CV/CVN, LPH/LHA, NAS/MCAS working environment.

Locations ..... MTU 4030, NAMTRAGRU DET, NS Mayport
MTU 4032, NAMTRAU, NAS Norfolk
MTU 4033, NAMTRAU, NAS North Island
MTU 4035, NAMTRAU, NAS Whidbey Island
Length..... 11 days
RFT date ..... Currently available
Skill identifier... AO 6801
TD/TTE ..... CATM-120, AN/GYQ-75A(V) or similar, CNU-555/E
Prerequisite ..... AO, GMG, TM, or Graduate of AO (ClassA1) School or equivalent or designated striker

Title	**Aviation Ordnance Intermediate Maintenance Technician**
CIN	C-646-3105 (part of M-646-7026)
Model Manager.	MTU 4034, MARTRAU MCAS Cherry Point, North Carolina
Description.....	This course provides training to USMC ordnance personnel, including: • Basic theory • Safety precautions • Technical publications • Missile/launcher reporting procedures Upon completion, the student will have sufficient knowledge/theory to be able to work on ordnance/armament in the MALS environment.
Locations	MTU-4034 NAMTRAMARU MCAS Cherry Point, North Carolina
Length.....	75 days
RFT date	Currently available
Skill identifier...	MOS 6541
TD/TTE	CATM-120, AN/GYQ-75A(V) or similar, CNU-555/E, LAU-116A/A, LAU-127A/A, A/E37T-35
Prerequisite	C-646-2011 Aviation Ordnanceman Common Core Class A1

Title	**Strike Armament Systems Intermediate Maintenance**
CIN	C-646-3118 (part of D/E-646-7001)
Model Manager.	MTU 4033, NAMTRAU, NAS North Island
Description.....	This course provides training to Aviation Ordnance Technicians, including: • Operational checkout procedures • Corrosion control • Troubleshooting procedures • Periodic maintenance procedures • Component removal, repair, replacement procedures • Use of special tools and test equipment • Use of publications • Use of safety and administrative procedures applicable to aircraft armament equipment items Upon completion of this course, the student will be able to perform work on aircraft armament equipment in the Aircraft Intermediate Maintenance Department environment under limited supervision.
Locations	MTU 4032, NAMTRAU, NAS Norfolk MTU 4033, NAMTRAU, NAS North Island
Length.....	65 days
RFT date	Currently available
Skill identifier...	AO 6802
TD/TTE	LAU-116A/A, LAU-127A/A, A/E37T-35
Prerequisite	Graduate of AO "A" School or designated AO striker

Title	**Air Launched Weapons Ordnance Supervisor**
CIN	C-646-4108 (part of D/E-646-7007)
Model Manager.	MTU 4032, NAMTRAU, NAS Norfolk
Description.....	This course provides training to the second tour Aviation Ordnancemen, including: • Introduction to Weapons Department Administration, • Introduction to Improved Rearming Rate System (IRRS), Magazines and Armament/Weapons Support Equipment, • Air Launched Weapons Configurations and Equipment • Introduction to Rockets, Cluster Bombs, Mines and Sound Underwater Signals • Introduction to Pyrotechnics, Linkless Ammunition Loading System (LALS) and Missile Upon completion of this course, officers and senior enlisted personnel will have sufficient knowledge of NAS, CV/CVN and Amphibious Aviation Ordnance administration and the IRRS, including all conventional munitions, associated equipment, magazines, handling procedures and related safety precautions to perform as supervisors on a NAS, CV/CVN or Amphibious Weapons Department.
Locations	MTU 4030, NAMTRAGRUDET, NS Mayport MTU 4032, NAMTRAU, NAS Norfolk MTU 4033, NAMTRAU, NAS North Island MTU 4035, NAMTRAU, NAS Whidbey Island
Length.....	17 days
RFT date	Currently available
Skill identifier...	AO 6801
TD/TTE	NA
Prerequisite	Graduate of AO (ClassA1) School or equivalent and E4-E7

Title	**Weapons Department General Aviation Ordnance**
CIN	C-646-4109 (stand-alone course)
Model Manager.	MTU 4033, NAMTRAU NAS North Island
Description.....	This course provides training to the first tour Aviation Ordnancemen, Gunner's Mates and Torpedoman's Mates, including: • Basic theory • Safety precautions • Technical publications • Missile reporting procedures • Introduction to Weapons Department, Ammunition Magazines, Shoring, Stowage and Handling Equipment • Introduction to Air Launched Weapons Upon completion of this course, the Aviation Ordnanceman assigned to Shipboard, Shoreboard, and Shore Combatant Weapons Departments as conventional weapons handlers, will have the sufficient knowledge and skills of procedures and safety requirements for receiving, transferring and storing conventional weapons, assembly and disassembly of bombs and rockets, loading and unloading flare and rocket launchers and the linkless anmmunition loading system, and the canning and decanning of miscellaneous ordnance, in accordance with applicable publications, while working under minimum supervision in a shipboard or shore environment.
Locations	MTU 4030, NAMTRAGRUDET, NS Mayport MTU 4032, NAMTRAU, NAS Norfolk MTU 4033, NAMTRAU, NAS North Island MTU 4035, NAMTRAU, NAS Whidbey Island
Length.....	10 days
RFT date	Currently available
Skill identifier...	N/A
TD.....	CATM-120, CNU-555/E
Prerequisite.....	AO, GMG, TM, or Graduate of AO (ClassA1) School or equivalent or designated striker

(5) Explosive Ordnance Disposal Training. EOD training is conducted by the NAVSCOLEOD at Eglin Air Force Base, Fort Walton Beach, Florida. Additional advanced and specialized EOD training is provided by EOD Technical Evaluation Units (EODTEUs) at Fort Story, Virginia and San Diego, California.

(a) TDs. TDs required for EOD training are the Practical Explosive Ordnance Disposal System Trainer (PEST).

- **Practical Explosive Ordnance Disposal System Trainer.** The AMRAAM PEST is a full-scale model of the tactical AMRAAM, containing inert versions of explosive train components. The AMRAAM PEST possesses the same weight and center of gravity characteristics as the tactical missile. The AMRAAM PEST is used to practice the AMRAAM Render Safe Procedures (RSPs). For further details on TDs see element IV.A.2.

(b) Courses. The following EOD courses have been modified to include the AIM-120A, AIM-120B, and AIM-120C AMRAAM. AMRAAM caused no change in student throughput or chargeable student billets, and, therefore, these courses do not appear in Parts II and III.

Table I-7. EOD Courses

COURSE NUMBER	COURSE TITLE	RFT DATE FOR AMRAAM
A-431-0011	Explosive Ordnance Disposal (EOD) Phase II (Navy)	On-line
A-431-0012	Explosive Ordnance Disposal (EOD) Phase II	On-line
G-431-0001	EOD Pre-deployment Team Training	On-line

c. Student Profiles. The following table lists the enlisted manpower and personnel classifications required that support AMRAAM. In many instances, AO personnel who support AMRAAM do not possess the component NEC because they attained their primary NEC prior to the recent A School and C School changes.

Table I-8. AMRAAM Student Profiles.

RATING and NEC or MOS	TITLE	COMPONENT NEC or MOS
AO 8841	F/A-18E/F System Organizational Apprentice Maintenance Technician	AO 0000
AO 8341	F/A-18E/F System Organizational Maintenance Technician	AO 8841
AO 8842	F/A-18 Armament System Organizational Apprentice Maintenance Technician	AO 0000
AO 8342	F/A-18 System Organizational Maintenance Technician	AO 8842
AT 8842	F/A-18 System Organizational Apprentice Maintenance Technician	AT 0000
AT 8342	F/A-18 System Organizational Maintenance Technician	AT 8842
MOS 6531	Aircraft Ordnance Technician (F/A-18)	6511
MOS 6541	Aviation Ordnance Intermediate Maintenance Technician	6511
AO 6801	Air Launched Weapons Technician	AO 0000
AO 6802	Strike Intermediate Armament Maintenanceman	AO 0000

d. Training Pipelines. New training tracks were not required for AMRAAM. The following training pipelines and tracks correspond to student profiles listed above. These pipelines and tracks are based on the training system that is in place today, and may not reflect actual progressions for personnel who completed formal training prior to the recent "A" School

and "C" School changes. Shaded courses were affected by the introduction of AMRAAM. Training tracks and associated courses are available in the OPNAV Aviation Training Management System (OATMS). The following training tracks apply and are available in OATMS.

AO 0000	→	AO 8841	→	AO 8341
Aviation Ordnanceman Class A1		F/A-18E/F Systems Organizational Apprentice Maintenance Technician		F/A-18E/F Systems Organizational Maintenance Technician
USN Strand		TRACK E-646-0642		TRACK E-646-0644
C-646-2011A C-646-2012A		C-600-3601 C-646-9976		C-600-3601 C-646-9975

Figure I-2 USN F/A-18E/F Systems Organizational Maintenance Technician Career Progression

AO 0000	→	AO 8842	→	AO 8342
Aviation Ordnanceman Class A1		F/A-18 Systems Organizational Apprentice Maintenance Technician		F/A-18 Systems Organizational Maintenance Technician
USN Strand		TRACK D/E-646-0654		TRACK D/E-646-0641
C-646-2011A C-646-2012A		C-600-3601 C-646-9973 D/E-646-0640		C-600-3601 C-646-9974

Figure I-3 USN F/A-18 Systems Organizational Maintenance Technician Career Progression

MOS 6511	→	MOS 6531
Aviation Ordnanceman Class A1		Aircraft Ordnance Technician (F/A-18)
Core Only		TRACK M-646-0654
C-646-2011A		C-600-3601 C-646-9973 D/E-646-0640 D/E-646-0647

Figure I-4 USMC F/A-18 Aircraft Ordnance Technician Career Progression

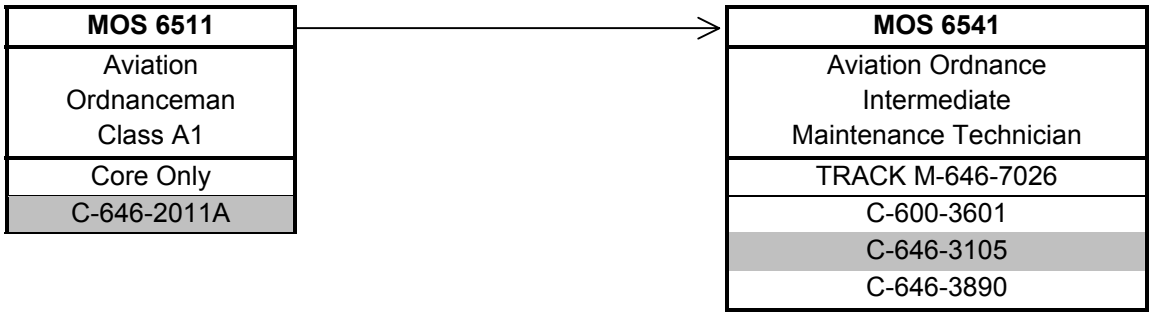

Figure I-5 Aviation Ordnance Intermediate Maintenance Technician Career Progression

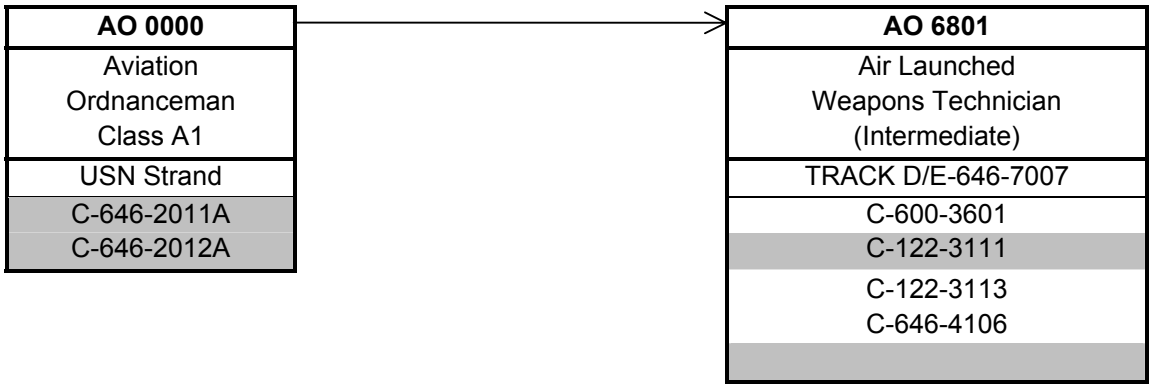

Figure I-6 Air Launched Weapons Technician Career Progression

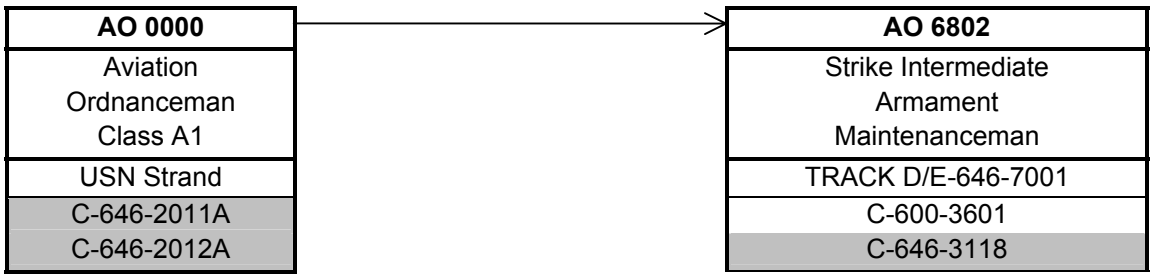

Figure I-7 Strike Intermediate Armament Maintenanceman Career Progression

I. ON-BOARD (IN-SERVICE) TRAINING

1. Proficiency or Other Training Organic to the New Development.

a. Maintenance Training Improvement Program. The Maintenance Training Improvement Program (MTIP) is used to establish an effective and efficient training system responsive to fleet training requirements. MTIP is a training management tool that, through diagnostic testing, identifies individual training deficiencies at the organizational and intermediate levels of maintenance. MTIP is the comprehensive testing of one's knowledge. It

consists of a bank of test questions managed through automated data processing. The Deputy Chief of Staff for Training assisted in development of MTIP by providing those question banks (software) already developed by the Navy. MTIP was implemented per OPNAVINST 4790.2 series. MTIP allows increased effectiveness in the application of training resources through identification of skills and knowledge deficiencies at the activity, work center, or individual technician level. Refresher training is concentrated where needed to improve identified skill and knowledge shortfalls. The Aviation Maintenance Training Continuum System (AMTCS) will replace MTIP. AMTCS began Beta version testing of F/A-18 curricula in October 2000.

COMNAVAIRPAC has discontinued using MTIP. They are currently using maintenance data products as a source to determine maintenance training deficiencies until AMTCS is implemented.

b. Aviation Maintenance Training Continuum System. AMTCS provides career path training to the Sailor or Marine from their initial service entry to the end of their military career. AMTCS is an integrated system that satisfies the training and administrative requirements of both the individual and the organization. The benefits are manifested in the increased effectiveness of the technicians and the increased efficiencies of the management of the training business process. By capitalizing on technological advances and integrating systems and processes where appropriate, the right amount of training can be provided at the right time, thus meeting the Chief of Naval Operations' (CNO's) mandated "just-in-time" training approach.

Technology investments enable the development of several state-of-the-art training and administrative tools: CBT for the technicians in the Fleet in the form of ICW with Computer Managed Instruction (CMI) and Computer Aided Instruction (CAI) for the schoolhouse.

Included in the AMTCS development effort is the Aviation Maintenance Training Continuum System - Software Module (ASM) which provides testing [Test and Evaluation (TEV)], recording [Electronic Training Jacket (ETJ)], and a Feedback system. The core functionality of these AMTCS tools are based and designed around the actual maintenance-related tasks the technicians perform, and the tasks are stored and maintained in a Master Task List (MTL) data bank. These tools are procured and fielded with appropriate Commercial off-the-shelf (COTS) hardware and software, i.e., Fleet Training Devices (FTD) - Laptops, PCs, Electronic Classrooms (ECR), Learning Resource Centers (LRC), operating software, and network software and hardware.

Upon receipt of direction from OPNAV (N789H), AMTCS is to be implemented and the new tools integrated into the daily training environment of all participating aviation activities and supporting elements. AMTCS will serve as the standard training system for aviation maintenance training within the Navy and Marine Corps, and is planned to supersede

the existing MTIP and Maintenance Training Management and Evaluation Program (MATMEP) programs.

The Ammunition and Explosive Handling Qualification and Certification (QUAL/CERT) Program requires periodic, local QUAL/CERT events to be documented in a QUAL/CERT Record. These QUAL/CERT Records will be maintained physically at the local activity, but will be entered electronically into the ETJ for tracking purposes.

c. Strike Fighter Training Program. NSAWC, which includes Topgun (N7), Strike Fighter Weapons School Atlantic (SFWSL), Strike Fighter Weapons School Pacific (SFWSP), and the Strike Weapons and Tactics School Atlantic (SWATSLANT), maintains post-FRS training at the squadron level for Navy Strike Fighter aircraft (F-14 and F/A-18). This post-FRS training continuum is known as the SFTP, and is composed of three equally critical elements: The SFWT curricula, the SFTI, and the SFTS. The SFWT curricula is taught by each squadron's SFTI, who is supported by SFTS, a multimedia computer-based training system that hosts CMI, CAI, CBT and ICW. Aircrew weapons proficiency training continues to be accomplished using existing methods: Academic, Simulator (WTT/Weapon Systems Trainer (WST)), CATM and/or embedded aircraft simulation, and NCEA; but capability ratings will be performance-based rather than completion-based, i.e., it will not be based simply upon completing the training events, but upon how well they are completed. Training events will be measured using defined metrics, and collectively these events will be evaluated to determine actual combat readiness, quantitatively (objectively) rather than qualitatively (subjectively). See the SFTP NTSP, N88-NTSP-A-50-9906, for more information.

2. Personnel Qualification Standards. N/A.

3. Other On-Board or In-service Training Packages.

a. Marine Aviation Training Management Evaluation Program. Marine Corps on-board training is based on the current series of Marine Corps Order (MCO) P4790.12, Individual Training Standards System and MATMEP. This program is designed to meet Marine Corps, as well as Navy OPNAVINST 4790.2 (series), maintenance training requirements. It is a performance-based, standardized, level-progressive training management and evaluation program. It identifies and prioritizes task inventories by MOS through a front-end analysis process that identifies task, skill, and knowledge requirements of each MOS. MTIP questions coupled to MATMEP tasks will help identify training deficiencies that can be addressed with remedial training. (AMTCS is planned to replace MATMEP.)

b. Conventional Weapon Technical Proficiency Inspection. The CWTPI is a graded inspection administered by Fighter Wing (FTRWING) and Strike Fighter Wing (STRKFTRWING). It is governed by the policy and procedures established by each Type Commander (TYCOM). The inspection team is made up of SFWS instructors under the direction of the Wing Ordnance Officer. The CWTPI covers all areas of conventional weapon

load and release, and control systems checks. The inspection evaluates the squadron's ability to wire-check, upload and download conventional ordnance correctly, use applicable publications, and place ordnance on its designated target. The squadron inspection is conducted annually, six months prior to deployment, or at the request of the squadron's Commanding Officer. All personnel, including squadron pilots, directly involved in the inspection, require a written examination. A 72-hour time limit is granted for the completion of the entire evolution. The final grade is an average score derived from the written exams, ordnance loads, wire checks, and the pilot's proficiency to deliver weapons on target. Pre-inspection training is provided by the appropriate SFWS or SWATSLANT, followed by the CWTPI. The CWTPI determines the need for further conventional weapons load training of squadron AO and Aviation Electronics Technician (AT) personnel at the appropriate SFWS.

c. Marine Corps Combat Readiness Evaluation. Marine Corps Headquarters schedules the USMC fighter and attack wings for a yearly Combat Readiness Evaluation. This is part of the Marine Corps Combat Readiness Evaluation System. An entire Marine Corps activity is moved to another location to participate in war exercises and to be evaluated. Training is an on-going Marine Corps evolution that culminates with the Combat Readiness Evaluation. The evaluation determines the need for further conventional weapons load training of squadron personnel.

d. Explosive Handling Qualification and Certification Program. The Ammunition and Explosive Handling QUAL/CERT Program is implemented by OPNAVINST 8020.14 and MCO P8020.11. To minimize the probability of mishap, the potential for personnel errors are controlled through training (qualification) coupled with a management process designed to prevent inadequately trained personnel from performing ammunition and explosives jobs/tasks (certification). Aviation Ordnancemen are required to perform periodic, local QUAL/CERT events in order to be authorized to handle ordnance. Results of these QUAL/CERT events are documented in a hardcopy QUAL/CERT Record and kept on file by the local activity.

J. LOGISTICS SUPPORT

1. Manufacturer and Contract Numbers. The following production contract numbers apply to the AIM-120C missiles.

Table I-9. Contract Numbers.

CONTRACT NUMBER	MANUFACTURER
F08626-94-C-0029	Raytheon Missile Systems Company
F08626-94-C-0030	Raytheon Missile Systems Company

2. Program Documentation. The AMRAAM Product Support Management Plan (PSMP), document number MS-001, was developed by the JSPO and is updated by periodic revision. The latest PSMP was updated and approved in January 2002. The PSMP provides the latest maintenance and related logistics support planning data for all systems components.

3. Technical Data Plan. A joint USAF and USN Technical Management Review Board has been established and meets when deemed necessary or when requested by the Assistant Program Manager, Logistics (APML) or JSPO to determine Technical Manuals (TM) requirements. Naval Air Technical Services Facility is the data manager for the F/A-18 TMs, as well as the AIM-120 Fleet Intermediate Maintenance TM.

4. Test Sets, Tools, and Test Equipment. The AMRAAM program has placed special emphasis on the use of existing support equipment. The following is a list of test sets, tools, and equipment that are new and peculiar to the AMRAAM program at the organizational and intermediate maintenance levels.

Table I-10. Test Sets, Tools & Equipment.

NOMENCLATURE	PART NUMBER	ACTIVITY
Tool, Fin Installation and Removal	SP548005-103	CV, NAS, MCAS
Adapter Insert, Wing and Transport, ADU-628/E	1700AS103	CV, NAS, MCAS
CFMRE, AN/GYQ-75A(V)	3187555	CV, NAS, MCAS

5. Repair Parts. The USAF is Executive Service for development, production, operation, and disposal of the AMRAAM weapon system. Warner Robins Air Logistics Center, Warner Robins AFB, Georgia, is assigned as the Primary Inventory Control Activity (PICA) for all common service multi-service AMRAAM items. The Naval Ordnance Center Inventory Management Systems Division, Naval Inventory Control Point (NAVICP), and NAVAIRSYSCOM are designated as the Secondary Inventory Control Activity (SICA). The SICA will stock and issue all necessary spare and repair parts for the missile and the launcher respectfully. NAVICP is the PICA for LAU-127 USN unique parts.

6. Human Systems Integration. The AMRAAM is a mature program. All new design systems and software address the human-machine interface for operators, maintainers, and support personnel. The design processes conformed to best standard human engineering practices as defined in existing human factors engineering design standards. The ECP process, in accordance with NAVAIRINST 4130.1C, is utilized to initiate upgrades to operational and training systems and allows for inputs to the affect on the human and MPT. All new engineering change proposals for the CV VLA take into consideration the human-machine interface for Operators, Maintainers and Support Personnel. This NTSP addresses manpower, personnel and

training in detail. Habitability is not an applicable HSI element for AMRAAM and the Manpower element is addressed in part I ,II and III of this document; the remaining HSI elements are addressed in the following paragraphs.

a. Personnel Survivability. Air-launched missile systems generally affect personnel survivability in two broad categories: handling (ordnance personnel) and employment (aircrew).

(1) Handling. During handling operations, survivability can be maximized by employing technology to mitigate the explosive nature of missile warheads and rocket motors. AMRAAM uses a Safe and Arm Fuze (SAF) device to detonate the warhead. To eliminate inadvertent arming of the SAF device, several conditions must be met: 1) a setback weight must be unlocked, 2) a minimum acceleration level must be met, and 3) a minimum power-on time must have elapsed. AMRAAM uses a MK 290 AFD, an electro-mechanical device that provides ground and captive flight protection against inadvertent rocket motor ignition. For preflight, there are no motor safing pins or keys and a small inspection port is used to verify its status. As an additional safeguard, AMRAAM uses its TIVS that weakens the rocket motor case, allowing the rocket motor to vent if ignited during fire or prolonged heat exposure.

(2) Employment. The primary concerns for aircrew survivability in air-to-air missile delivery involves missile/target blast fragmentation and hung missiles. AMRAAM has an impressive minimum range, but the distance is still greater than the range where blast fragmentation can impact the shooter aircraft. Additionally, post fox maneuvers are discussed/taught for any situation of interest. Procedures for hung missiles are in place, as well as emergency jettison procedures.

b. Health. Health factors generated by missiles are generally categorized into direct-contact health hazards, e.g., solvents, lubricants, etc., and proximity health hazardous material, e.g., heavy metals, irradiated metals, etc. The AMRAAM program has minimized the number of direct-contact health hazards for maintenance personnel, and these hazards are readily identified in the loading and maintenance manuals, e.g., braycote lubricant for the buffer connector. AMRAAM does not contain any proximity health hazardous materials.

c. Safety. Air-launched missile systems generally affect safety in two broad categories: handling (ordnance personnel) and employment (aircrew).

(1) Handling. There are no special hazards involved with handling or storing AMRAAM. During handling operations, general ordnance safety standards (NAVSEA OP 4 OP5, OP 2165 and OP 3347 and OPNAVINST 8023.3) are employed. Inspections have been designed to detect potential problems and resolve them. AMRAAM uses a SAF device to provide protection against inadvertent warhead detonation; a MK 290 AFD and a TIVS to provide protection against inadvertent rocket motor ignition (see Personnel Survivability). In the event of a fire, cook-off times and evacuation (withdrawal) distances have been developed.

(2) Employment. The aircrew safety concerns include missile/target blast fragmentation and hung missiles. AMRAAM is a medium-range missile with impressive minimum ranges, but does not pose a blast fragmentation concern. Post-fox maneuvers for a variety of shot parameters are taught. Procedures for hung missiles are in place, as well as emergency jettison procedures.

d. Environmental. The AMRAAM program employs a contractor depot for missile repairs and includes demilitarization. Raytheon is responsible for meeting any federal/state environmental requirements/compliance. Other than these situations, only live-fire exercises present environmental concerns.

e. Human Factors. Human interaction with air-launched missile systems generally fall into three categories: unpacking/assembly, loading and employment.

(1) Unpacking/Assembly. The AMRAAM design provides for a minimum of unpacking and assembly procedures. Four missiles are packed nose-to-tail in the AUR shipping container. Each missile is made up of a missile body, wings (4/missile), fins (4/missile) and a buffer connector. Wings, fins and buffer connector are not assembled to the missile until the missile body is loaded on the aircraft. The missile body is lifted from its container and placed on a skid for transport to the flight deck/line.

(2) Loading. Five ordnance personnel are used to lift the missile body from the skid and place it in the aircraft launcher. Wings, fins and buffer connector are assembled to the missile once it is loaded on the aircraft. The "clipped" wings and fins used on the AIM-120C variants are physically not interchangeable with the AIM-120A/B wings and fins. Attachment of the AIM-120C fin was purposely designed to thread in the reverse direction of the AIM-120A/B fin.

(3) Employment. The aircrew interface with the missile largely through the digital displays and readouts in the cockpit. The original AMRAAM symbology incorporated into FA-18 was designed in conjunction with input from a pilot-formed design advisory group. Since its inception, the AMRAAM symbology has been reviewed and adjusted as needed as aircraft software loads have been updated.

f. Training. Pilot training includes an integrated sequence of computer based training, simulator exercises, and flight regimes. It consists of both self-paced lesson and instructor presented phase lectures. Maintenance training includes a blend of ICW and paper based instruction. All future CBT development will be Sharable Courseware Object Reference Model compliant and comply with the technical standards to run in the intended environment: classroom (AEC or LRC), Navy e-learning, AMTCS, or desktop (NMCI ashore or IT21 afloat). This will allow tracking of student progress and completion via the Learning Management System (LMS).

g. Training Effectiveness Evaluations. A formal Training Effectiveness Evaluation (TEE) plan has not been developed for AMRAAM courses. For air-launched weapons, the TEE is addressed by each user community as follows.

(1) Aircrew/pilot Training. The Strike Fighter Training Program (SFTP) (see paragraph I.1.c) drives training and readiness for aircrew/pilot weapons employment. Within this program, various means are used to evaluate training effectiveness including events from the Training & Readiness (T&R) matrix. These events include AMRAAM employment, both simulated and live fire, and are used to evaluate the combat readiness of aircrew, squadron and air wing. See the SFTP NTSP, N88-NTSP-A-50-9906, for more information. The training effectiveness of AMRAAM employment is further evaluated during Fleet and Joint-Service exercises, e.g., Marine Corps Combat Readiness Evaluation (see paragraph I.3.c), Joint Training Exercise (JTX), etc. Ultimately, when significant training deficiencies are identified, they are communicated at the annual Naval Aviation Training Systems Advisory Group (NATSAG) meetings and prioritized.

(2) Squadron/Organizational-level Maintenance. AO's at the organizational-level use several training effectiveness tools. The first tool is the Conventional Weapon Technical Proficiency Inspection (CWTPI) (see paragraph I.3.b). These inspections evaluate how well the individual, load crew, and squadron perform weapon loading. The second tool is the Explosive Handling Qualification and Certification Program (see paragraph I.3.d). The program is implemented to minimize the probability of mishap. The potential for personnel errors are controlled through training (qualification) coupled with a management process designed to prevent inadequately trained personnel from performing ammunition and explosives jobs/tasks (certification). Ultimately, the Maintenance Training Improvement Program (MTIP) (see paragraph I.1.a), Marine Aviation Training Management Evaluation Program (MATMEP) (see paragraph I.3.a), and Aviation Maintenance Training Continuum System (AMTCS) (see paragraph I.1.b) are used to collect data and identify training deficiencies.

(3) Weapons Department/Intermediate-level Maintenance. AOs at the intermediate-level use several training effectiveness tools. The first tool is the Explosive Handling Qualification and Certification Program (see paragraph I.3.d). The program is implemented to minimize the probability of mishap. The potential for personnel errors are controlled through training (qualification) coupled with a management process designed to prevent inadequately trained personnel from performing ammunition and explosives jobs/tasks (certification). Ultimately, the Aviation Maintenance Training Continuum System (AMTCS) (see paragraph I.1.b) is used to collect data and identify training deficiencies. Additionally, courses go through an annual Formal Course Review (FCR) and are further improved via the Training Feedback System.

K. SCHEDULES

1. Schedule of Events

a. Delivery Schedules. Final delivery of fleet AIM-120A and AIM-120B missiles is completed. The Material Support Date was attained in December 1996. The Navy Support Date was attained in FY98. Delivery of AIM-120C missiles and P^3I missiles is planned through FY12.

b. Ready For Operational Use Schedule. The AIM-120A , AIM-120B, and AIM-120C Missiles are currently in use and considered operational upon delivery.

c. Time Required to Install at Operational Sites. NA.

d. Foreign Military Sales and Other Source Delivery Schedule. The USAF, as the executive service, is responsible for FMS. The AMRAAM is compatible with weapons systems currently being operated by several North Atlantic Treaty Organization allies and is included in the FMS program.

e. Training Device and Delivery Schedule. A total of 52 CATM-120Cs have been procured and delivered. A total of 156 CATM-120Bs have been procured and delivered. CFMRE requirements for intermediate level schools have been identified (see Part IV) and will be procured via the follow-on CFMRE acquisition contracts.

L. GOVERNMENT FURNISHED EQUIPMENT AND CONTRACTOR FURNISHED EQUIPMENT TRAINING REQUIREMENTS. NA.

M. RELATED NTSPs AND OTHER APPLICABLE DOCUMENTS

DOCUMENT TITLE	DOCUMENT NUMBER	PDA CODE	STATUS
F/A-18 Weapons System NTSP	N88-NTSP-A-50-7703H/A	PMA265	Approved Dec 01
Joint Service PSMP, AMRAAM	MS-001	PMA259	Approved Jan 02
Strike Fighter Training Program NTSP	N88-NTSP-A-50-9906/A	PMA205	Approved May 02

PART II - BILLET AND PERSONNEL REQUIREMENTS

The following elements are not affected by the AIM-120 Advanced Medium Range Air-to-Air Missile and therefore are not included in Part II of this NTSP:

II.B. Personnel Requirements

11.B.3. Foreign, Other Service, and Non-Military Personnel Annual Training Input Requirement

NOTE 1: This section of the AIM-120 Advanced Medium Range Air-to-Air Missile NTSP reflects maintenance billet and personnel requirements for the AIM-120. It is a compilation of six organizational and two intermediate level NECs (AO 8341, 8342, and 8842 (F/A-18), and AO 6801and organizational level MOS (6531 and 6541, respectively) with associated billets. The addition of the AIM-120 to the organizational and intermediate level workloads is only a small percentage of the required workload for those NECs and MOS. The NECs and MOS are not dedicated to the AIM-120 and, therefore, the overall training throughput for the NEC and MOS will remain the same, i.e., account for the total NEC/MOS community, and not just activities receiving AIM-120

NOTE 2: All billets identified in this section are programmed through other NTSPs, e.g., F/A-18 NTSP, applicable CV/CVN Class Total Ship NTSP, or applicable Shore Activity Manning Documents. The activities and associated billets are listed to assist the weapons training community in identifying and managing training requirements throughout the development, production and deployment of the AIM-120.

PART II - BILLET AND PERSONNEL REQUIREMENTS

II.A. BILLET REQUIREMENTS

II.A.1.a. OPERATIONAL AND FLEET SUPPORT ACTIVITY ACTIVATION SCHEDULE

SOURCE: USN: Total Force Manpower Management System, TFMMS **DATE:** 10/1/02
USMC: Extracted from Table of Manpower Requirements, TFS MCCDC **DATE:** 10/1/02

ACTIVITY, UIC		PFYs	CFY03	FY04	FY05	FY06	FY07
OPERATIONAL ACTIVITIES - USMC							
HMH 772 CH-53E	09490	1	0	0	0	0	0
HMH CH-53E (East Coast)	00000	2	0	0	0	0	0
HMLA 773	09431	1	0	0	0	0	0
HMLA 773 DET	00000	1	0	0	0	0	0
HMLA 775 DET A	09415	1	0	0	0	0	0
HMLA AH-1/9 UH-1 (East Coast)	00000	2	0	0	0	0	0
HMM 774 CH-46	09430	1	0	0	0	0	0
HMM CH-46E (East Coast)	00000	5	0	0	0	0	0
VMA AV-8B (East Coast)	00000	3	0	0	0	0	0
VMAQ EA-6B (East Coast)	00000	4	0	0	0	0	0
VMFA 321	67235	1	0	0	0	0	0
VMFA F/A18 (East Coast)	00000	4	0	0	0	0	0
VMFA (AW) F/A 18 (East Coast)	00000	3	0	0	0	0	0
VMFA-142	67243	1	0	0	0	0	0
VMM MV-22A	00000	1	0	0	0	0	0
HMH 769 CH-53E	09487	1	0	0	0	0	0
HMH CH-53D (West Coast)	00000	3	0	0	0	0	0
HMH CH-53E (West Coast)	00000	4	0	0	0	0	0
HMLA 775	55257	1	0	0	0	0	0
HMLA AH-1/9 UH-1(West Coast)	00000	4	0	0	0	0	0
HMM 764 CH-46	09402	1	0	0	0	0	0
HMM CH-46E (West Coast)	00000	8	0	0	0	0	0
MALS 41 (FW)	03007	1	0	0	0	0	0
VMA AV-8B (West Coast)	00000	4	0	0	0	0	0
VMFA 112	08954	1	0	0	0	0	0
VMFA 134	09365	1	0	0	0	0	0
VMFA F/A18 (West Coast)	00000	4	0	0	0	0	0
VMFA (AW) F/A18 (west Coast)	00000	3	0	0	0	0	0
TOTAL:		67	0	0	0	0	0
FLEET SUPPORT ACTIVITIES - NAVY							
AIROPS/NAVOSH PM Brunswick ME	3193B	1	0	0	0	0	0
NAMTRAGRUDET Mayport	66069	1	0	0	0	0	0
ATG Norfolk	30733	1	0	0	0	0	0
AVORD MTT Norfolk	48764	1	0	0	0	0	0
COMNAVAIRLANT	57012	1	0	0	0	0	0
CSFWLD Beaufort	3006A	1	0	0	0	0	0
LANTORDDET	31279	1	0	0	0	0	0
NAF Mildenhall	57032	1	0	0	0	0	0
NAMTRAU Norfolk	66046	1	0	0	0	0	0
NAS Keflavik Iceland	63032	1	0	0	0	0	0
Naval Ordnance Center, Indian Head, MD	68963	1	0	0	0	0	0

II.A.1.a. OPERATIONAL AND FLEET SUPPORT ACTIVITY ACTIVATION SCHEDULE

SOURCE: USN: Total Force Manpower Management System, TFMMS **DATE:** 2/1/02
USMC: Extracted from Table of Manpower Requirements, TFS MCCDC **DATE:** 2/1/02

ACTIVITY, UIC		PFYs	CFY03	FY04	FY05	FY06	FY07
NAVSTKAIR TS	39783	1	0	0	0	0	0
NWS Charleston, SC	00193	1	0	0	0	0	0
USS Bataan LHD 5	21879	1	0	0	0	0	0
USS Eisenhower CVN 69	03369	1	0	0	0	0	0
USS Enterprise CVN 65	03365	1	0	0	0	0	0
USS George Washington CVN 73	21412	1	0	0	0	0	0
USS Harry S. Truman CVN 75	21853	1	0	0	0	0	0
USS Iwo Jima LHD 7	23027	1	0	0	0	0	0
USS John F. Kennedy CV 76	03367	1	0	0	0	0	0
USS Kearsarge LHD 3	21700	1	0	0	0	0	0
USS Nassau LHA 4	20725	1	0	0	0	0	0
USS Ronald Reagan CVN-76	22178	1	0	0	0	0	0
USS Roosevelt CVN 71	21247	1	0	0	0	0	0
USS Saipan LHA 2	20632	1	0	0	0	0	0
USS Wasp LHD 1	21560	1	0	0	0	0	0
VFA 106		1	0	0	0	0	0
USS Copnstellation CV64	03364	1	0	0	0	0	0
CNATRA CAU Kingsville TX	49149	1	0	0	0	0	0
NAF El Centro	60042	1	0	0	0	0	0
NAIRWPMAINTUN 1	52821	1	0	0	0	0	0
NAMTRAU North Island	66065	1	0	0	0	0	0
NAMTRAU Whidbey Island	66058	1	0	0	0	0	0
NAS Lemoore	63126	1	0	0	0	0	0
NAVBASE Point Mugu	69232	1	0	0	0	0	0
NAWCWD (NWCF)	63126	1	0	0	0	0	0
NSUPFAC Diego Garcia	68539	1	0	0	0	0	0
USS B Richard LHD 6	22202	1	0	0	0	0	0
USS Bella Wood LHA 3	20633	1	0	0	0	0	0
USS Boxer LHD 4	21808	1	0	0	0	0	0
USS Carl Vinson CVN 70	20993	1	0	0	0	0	0
USS Essex LHD 2	21533	1	0	0	0	0	0
USS John C. Stennis CVN 74	21847	1	0	0	0	0	0
USS Kitty Hawk CV63	03363	1	0	0	0	0	0
USS Abraham Lincoln CVN 72	21297	1	0	0	0	0	0
USS Nimitz CVN 68	03368	1	0	0	0	0	0
USS Peleliu LHA 5	20748	1	0	0	0	0	0
USS Tarawa LHA 1	20550	1	0	0	0	0	0
VAQ 129	83896	1	0	0	0	0	0
VFA 125	53971	1	0	0	0	0	0
TOTAL:		50	0	0	0	0	0
FLEET SUPPORT ACTIVITIES - USMC							
Blout Island Command	38450	1	0	0	0	0	0
FW MALS (East Coast)	00000	2	0	0	0	0	0
H&HS MCAS Beaufort SC	02031	1	0	0	0	0	0
H&HS MCAS Cherry Point NC	02002	1	0	0	0	0	0
H&HS MCAS New River NC	02021	1	0	0	0	0	0

II.A.1.a. OPERATIONAL AND FLEET SUPPORT ACTIVITY ACTIVATION SCHEDULE

SOURCE: USN: Total Force Manpower Management System, TFMMS **DATE:** 2/1/02
USMC: Extracted from Table of Manpower Requirements, TFS MCCDC **DATE:** 2/1/02

ACTIVITY, UIC		PFYs	CFY03	FY04	FY05	FY06	FY07
MALS 42 (RW)	09513	1	0	0	0	0	0
MALS 49 (RW)	55555	1	0	0	0	0	0
MALS-Rotary Wing (East Coast)	00000	2	0	0	0	0	0
MC Pers Dept of Navy Non-Dept	00000	1	0	0	0	0	0
VMAT 203	45483	1	0	0	0	0	0
Ft Worth, Site Support	00000	1	0	0	0	0	0
FW MALS (West coast)	00000	3	0	0	0	0	0
H&HS Futenma Japan	02601	1	0	0	0	0	0
H&HS Iwakuni Japan	02501	1	0	0	0	0	0
H&HS MCAS Camp Pendleton CA	02208	1	0	0	0	0	0
H&HS MCAS Miramar CA	02201	1	0	0	0	0	0
H&HS MCAS Yuma AZ	02230	1	0	0	0	0	0
HMT 303	55176	1	0	0	0	0	0
MAD China Lake	06117	1	0	0	0	0	0
MALS-Rotary Wing (West Coast)	00000	3	0	0	0	0	0
Marine Aviation Logistics Support	02300	1	0	0	0	0	0
MAWTS 1 Yuma AZ	55167	1	0	0	0	0	0
MCAF Kaneohe Bay HI	02303	1	0	0	0	0	0
MCAGCC 29 Palms	67399	1	0	0	0	0	0
VMAT 101	09965	1	0	0	0	0	0
TOTAL:		31	0	0	0	0	0

II.A.1.b. BILLETS REQUIRED FOR OPERATIONAL AND FLEET SUPPORT ACTIVITIES

ACTIVITY, UIC, PHASING INCREMENT	BILLETS OFF	BILLETS ENL	DESIG/ RATING	PNEC/ PMOS	SNEC/ SMOS
OPERATIONAL ACTIVITIES - USMC					
HMH 772 CH-53E, 09490					
USMC	0	1	CPL	6541	
	0	1	LCPL	6541	
ACTIVITY	0	2			
HMH CH-53E (East Coast), 00000					
USMC	0	5	CPL	6541	
	0	1	LCPL	6541	
ACTIVITY	0	6			
HMLA 773, 09431					
USMC	0	2	CPL	6541	
	0	2	LCPL	6541	
AR	0	1	SGT	6541	
SMCR	0	2	CPL	6541	
	0	4	LCPL	6541	
	0	1	SGT	6541	
ACTIVITY	0	12			
HMLA 773 DET, 00000					
USMC	0	2	CPL	6541	
	0	2	LCPL	6541	
AR	0	1	SGT	6541	
SMCR	0	1	LCPL	6541	
ACTIVITY	0	6			
HMLA 775 DET A, 09415					
USMC	0	2	CPL	6541	
	0	2	LCPL	6541	
AR	0	1	SGT	6541	
SMCR	0	1	LCPL	6541	
ACTIVITY	0	6			

II.A.1.b. BILLETS REQUIRED FOR OPERATIONAL AND FLEET SUPPORT ACTIVITIES

ACTIVITY, UIC, PHASING INCREMENT	BILLETS OFF	BILLETS ENL	DESIG/ RATING	PNEC/ PMOS	SNEC/ SMOS
HMLA AH-1/9 UH-1(East Coast), 00000					
USMC	0	6	CPL	6541	
	0	9	LCPL	6541	
	0	3	SGT	6541	
ACTIVITY	0	18			
HMM 774 CH-46, 09430					
USMC	0	2	CPL	6541	
ACTIVITY	0	2			
HMM CH-46E (East Coast), 00000					
USMC	0	2	CPL	6541	
ACTIVITY	0	2			
VMA AV-8B (East Coast), 00000					
USMC	0	3	CPL	6541	
	0	7	LCPL	6541	
	0	2	SGT	6541	
ACTIVITY	0	12			
VMAQ EA-6B (East Coast), 00000					
USMC	0	1	CPL	6541	
ACTIVITY	0	1			
VMFA 321, 67235					
USMC	0	2	LCPL	6541	
	0	1	SGT	6541	
AR	0	1	SGT	6541	
	0	1	SSGT	6541	
SMCR	0	1	GYSGT	6541	
	0	4	LCPL	6541	
ACTIVITY	0	10			
VMFA F/A18 (East Coast), 00000					
USMC	0	1	GYSGT	6541	
	0	6	LCPL	6541	
	0	2	SGT	6541	
	0	1	SSGT	6541	
ACTIVITY	0	10			

II.A.1.b. BILLETS REQUIRED FOR OPERATIONAL AND FLEET SUPPORT ACTIVITIES

ACTIVITY, UIC, PHASING INCREMENT	BILLETS OFF	BILLETS ENL	DESIG/ RATING	PNEC/ PMOS	SNEC/ SMOS
VMFA (AW) F/A 18 (East Coast), 00000					
USMC	0	1	CPL	6541	
	0	5	LCPL	6541	
	0	3	SGT	6541	
	0	2	SSGT	6541	
ACTIVITY	0	11			
VMFA-142, 67243					
USMC	0	2	LCPL	6541	
	0	1	SGT	6541	
AR	0	1	SGT	6541	
	0	1	SSGT	6541	
SMCR	0	1	GYSGT	6541	
	0	4	LCPL	6541	
ACTIVITY	0	10			
VMM MV-22A, 00000					
USMC	0	2	CPL	6541	
ACTIVITY	0	2			
HMH 769 CH-53E, 09487					
USMC	0	1	CPL	6541	
AR	0	1	LCPL	6541	
ACTIVITY	0	2			
HMH CH-53D (West Coast), 00000					
USMC	0	2	CPL	6541	
ACTIVITY	0	2			
HMH CH-53E (West Coast), 00000					
USMC	0	5	CPL	6541	
	0	1	LCPL	6541	
ACTIVITY	0	6			

II.A.1.b. BILLETS REQUIRED FOR OPERATIONAL AND FLEET SUPPORT ACTIVITIES

ACTIVITY, UIC, PHASING INCREMENT	BILLETS OFF	BILLETS ENL	DESIG/ RATING	PNEC/ PMOS	SNEC/ SMOS
HMLA 775, 55257					
USMC	0	2	CPL	6541	
	0	2	LCPL	6541	
AR	0	1	SGT	6541	
SMCR	0	2	CPL	6541	
	0	4	LCPL	6541	
	0	1	SGT	6541	
ACTIVITY	0	12			
HMLA AH-1/9 UH-1 (West Coast), 00000					
USMC	0	6	CPL	6541	
	0	9	LCPL	6541	
	0	3	SGT	6541	
ACTIVITY	0	18			
HMM 764 CH-46, 09402					
USMC	0	2	CPL	6541	
ACTIVITY	0	2			
HMM CH-46E (West Coast), 00000					
USMC	0	2	CPL	6541	
ACTIVITY	0	2			
MALS 41 (FW), 03007					
USMC	0	1	CPL	6541	
	0	2	GYSGT	6541	
	0	1	LCPL	6541	
	0	1	SGT	6541	
AR	0	1	GYSGT	6541	
	0	1	SGT	6541	
	0	2	SSGT	6541	
SMCR	0	7	CPL	6541	
	0	2	GYSGT	6541	
	0	20	LCPL	6541	
	0	6	SGT	6541	
	0	4	SSGT	6541	
ACTIVITY	0	48			

II.A.1.b. BILLETS REQUIRED FOR OPERATIONAL AND FLEET SUPPORT ACTIVITIES

ACTIVITY, UIC, PHASING INCREMENT	BILLETS OFF	BILLETS ENL	DESIG/ RATING	PNEC/ PMOS	SNEC/ SMOS
VMA AV-8B (West Coast), 00000					
USMC	0	3	CPL	6541	
	0	7	LCPL	6541	
	0	2	SGT	6541	
ACTIVITY	0	12			
VMFA 112, 08954					
USMC	0	2	LCPL	6541	
	0	1	SGT	6541	
AR	0	1	SGT	6541	
	0	1	SSGT	6541	
SMCR	0	1	GYSGT	6541	
	0	4	LCPL	6541	
ACTIVITY	0	10			
VMFA 134, 09365					
USMC	0	2	LCPL	6541	
	0	1	SGT	6541	
AR	0	1	SSGT	6541	
SMCR	0	1	GYSGT	6541	
	0	4	LCPL	6541	
	0	1	SGT	6541	
ACTIVITY	0	10			
VMFA F/A18 (West Coast), 00000					
USMC	0	1	GYSGT	6541	
	0	6	LCPL	6541	
	0	2	SGT	6541	
	0	1	SSGT	6541	
ACTIVITY	0	10			
VMFA (AW) F/A18 (west Coast), 00000					
USMC	0	1	CPL	6541	
	0	5	LCPL	6541	
	0	3	SGT	6541	
	0	2	SSGT	6541	
ACTIVITY	0	11			

II.A.1.b. BILLETS REQUIRED FOR OPERATIONAL AND FLEET SUPPORT ACTIVITIES

ACTIVITY, UIC, PHASING INCREMENT	BILLETS OFF	BILLETS ENL	DESIG/ RATING	PNEC/ PMOS	SNEC/ SMOS
FLEET SUPPORT ACTIVITIES - NAVY					
AIROPS/NAVOSH PM Brunswick ME, 3193B					
ACDU	0	2	AO1	6801	
	0	1	AO1	6801	0812
	0	3	AO2	6801	
	0	2	AO3	6801	
ACTIVITY	0	8			
NAMTRAGRUDET Mayport, 66069					
ACDU	0	2	AOC	6801	9502
	0	2	AO1	6801	9502
ACTIVITY	0	4			
ATG Norfolk, 30733					
ACDU	0	2	AOC	6801	
ACTIVITY	0	2			
AVORD MTT Norfolk, 48764					
ACDU	0	5	AO1	6801	
ACTIVITY	0	5			
COMNAVAIRLANT, 57012					
ACDU	0	2	AOC	6801	
ACTIVITY	0	2			
CSFWLD Beaufort, 3006A					
ACDU	0	1	AO1	6801	
	0	3	AO2	6801	
	0	3	AO3	6801	
ACTIVITY	0	7			
LANTORDDET, 31279					
ACDU	0	1	AOC	6801	
	0	1	AO1	6801	
	0	8	AO2	6801	
	0	14	AO3	6801	
ACTIVITY	0	24			

II.A.1.b. BILLETS REQUIRED FOR OPERATIONAL AND FLEET SUPPORT ACTIVITIES

ACTIVITY, UIC, PHASING INCREMENT	BILLETS OFF	BILLETS ENL	DESIG/ RATING	PNEC/ PMOS	SNEC/ SMOS
NAF Mildenhall, 57032					
ACDU	0	1	AOC	6801	
ACTIVITY	0	1			
NAMTRAU Norfolk, 66046					
ACDU	0	1	AOC	6801	9502
	0	3	AO1	6801	9502
ACTIVITY	0	4			
NAS Keflavik Iceland, 63032					
ACDU	0	1	AOC	6801	
	0	1	AOC	0812	6801
	0	1	AO2	6810	6801
	0	1	AO3	6801	
ACTIVITY	0	4			
Naval Ordnance Center, Indian Head, MD, 68963					
USMC	0	1	SSGT	6541	
ACTIVITY	0	1			
NAVSTKAIR TS, 39783					
ACDU	0	2	AO1	6801	
	0	1	AO2	6801	
	0	5	AO3	6801	
ACTIVITY	0	8			
NWS Charleston, SC, 00193					
USMC	0	2	CPL	6541	
	0	1	GYSGT	6541	
	0	2	SGT	6541	
ACTIVITY	0	5			
USS Bataan LHD 5, 21879					
ACDU	0	2	AOC	6801	
	0	8	AO1	6801	
	0	2	AO2	6801	
ACTIVITY	0	12			

II.A.1.b. BILLETS REQUIRED FOR OPERATIONAL AND FLEET SUPPORT ACTIVITIES

ACTIVITY, UIC, PHASING INCREMENT	BILLETS OFF	BILLETS ENL	DESIG/ RATING	PNEC/ PMOS	SNEC/ SMOS
USS Eisenhower CVN 69, 03369					
ACDU	0	7	AOC	6801	
	0	23	AO1	6801	
	0	30	AO2	6801	
SELRES	0	4	AOC	6801	
	0	5	AO1	6801	
	0	4	AO2	6801	
ACTIVITY	0	73			
USS Enterprise CVN 65, 03365					
ACDU	0	1	AOC	6801	
	0	9	AO1	6801	
ACTIVITY	0	10			
USS George Washington CVN 73, 21412					
ACDU	0	5	AOC	6801	
	0	20	AO1	6801	
	0	33	AO2	6801	
SELRES	0	3	AOC	6801	
	0	4	AO1	6801	
	0	3	AO2	6801	
ACTIVITY	0	68			
USS Harry S. Truman CVN 75, 21853					
ACDU	0	5	AOC	6801	
	0	21	AO1	6801	
	0	29	AO2	6801	
SELRES	0	3	AOC	6801	
	0	4	AO1	6801	
	0	3	AO2	6801	
USS Harry S. Truman CVN 75, 21853, FY04 Increment					
ACDU	0	4	AO2	6801	
ACTIVITY	0	69			
USS Iwo Jima LHD 7, 23027					
ACDU	0	2	AOC	6801	
	0	8	AO1	6801	
	0	2	AO2	6801	
ACTIVITY	0	12			

II.A.1.b. BILLETS REQUIRED FOR OPERATIONAL AND FLEET SUPPORT ACTIVITIES

ACTIVITY, UIC, PHASING INCREMENT	BILLETS OFF	BILLETS ENL	DESIG/ RATING	PNEC/ PMOS	SNEC/ SMOS
USS John F. Kennedy CV 76, 03367					
ACDU	0	7	AOC	6801	
	0	25	AO1	6801	
	0	29	AO2	6801	
SELRES	0	2	AO1	6801	
	0	7	AO2	6801	
ACTIVITY	0	70			
USS Kearsarge LHD 3, 21700					
ACDU	0	2	AOC	6801	
	0	8	AO1	6801	
	0	2	AO2	6801	
ACTIVITY	0	12			
USS Nassau LHA 4, 20725					
ACDU	0	2	AOC	6801	
	0	10	AO1	6801	
	0	1	AO2	6801	
ACTIVITY	0	13			
USS Ronald Reagan CVN-76, 22178					
ACDU	0	9	AOC	6801	
	0	29	AO1	6801	
	0	37	AO2	6801	
ACTIVITY	0	75			
USS Roosevelt CVN 71, 21247					
ACDU	0	5	AOC	6801	
	0	20	AO1	6801	
	0	33	AO2	6801	
SELRES	0	3	AOC	6801	
	0	4	AO1	6801	
	0	3	AO2	6801	
ACTIVITY	0	68			
USS Saipan LHA 2, 20632					
ACDU	0	2	AOC	6801	
	0	10	AO1	6801	
	0	1	AO2	6801	
ACTIVITY	0	13			

II.A.1.b. BILLETS REQUIRED FOR OPERATIONAL AND FLEET SUPPORT ACTIVITIES

ACTIVITY, UIC, PHASING INCREMENT	BILLETS OFF	BILLETS ENL	DESIG/ RATING	PNEC/ PMOS	SNEC/ SMOS
USS Wasp LHD 1, 21560					
ACDU	0	2	AOC	6801	
	0	8	AO1	6801	
	0	2	AO2	6801	
ACTIVITY	0	12			
VFA 106					
USMC	0	1	SGT	6541	
ACTIVITY	0	1			
USS Constellation CV64, 03364					
ACDU	0	6	AOC	6801	
	0	10	AO1	6801	
ACTIVITY	0	16			
CNATRA CAU Kingsville TX, 49149					
ACDU	0	1	AO1	6801	9549
ACTIVITY	0	1			
NAF El Centro, 60042					
ACDU	0	1	AOC	6801	
	0	1	AO1	6801	
	0	5	AO2	6801	
ACTIVITY	0	7			
NAIRWPMAINTUN 1, 52821					
ACDU	0	1	AOC	6801	
	0	3	AO1	6801	
	0	12	AO2	6801	
	0	4	AO3	6801	
ACTIVITY	0	20			
NAMTRAU North Island, 66065					
ACDU	0	3	AO1	6801	9502
	0	2	AO2	6801	9502
ACTIVITY	0	5			

II.A.1.b. BILLETS REQUIRED FOR OPERATIONAL AND FLEET SUPPORT ACTIVITIES

ACTIVITY, UIC, PHASING INCREMENT	BILLETS OFF	BILLETS ENL	DESIG/ RATING	PNEC/ PMOS	SNEC/ SMOS
NAMTRAU Whidbey Island, 66058					
ACDU	0	2	AOC	6801	9502
	0	3	AO1	6801	9502
ACTIVITY	0	5			
NAS Lemoore, 63126					
ACDU	0	2	AO1	6801	
	0	1	AO2	6801	
	0	1	AO2	6801	0812
ACTIVITY	0	4			
NAVBASE VC Point Mugu, 69232					
ACDU	0	4	AO1	6801	
	0	5	AO2	6801	
ACTIVITY	0	9			
NAWCWD (NWCF), 63126					
ACDU	0	1	AO1	6801	
ACTIVITY	0	1			
NSUPFAC Diego Garcia, 68539					
ACDU	0	1	AO1	6801	
	0	2	AO2	6801	
	0	2	AO3	6801	
ACTIVITY	0	5			
USS B Richard LHD 6, 22202					
ACDU	0	2	AOC	6801	
	0	8	AO1	6801	
	0	2	AO2	6801	
ACTIVITY	0	12			
USS Bella Wood LHA 3, 20633					
ACDU	0	2	AOC	6801	
	0	9	AO1	6801	
	0	1	AO2	6801	
ACTIVITY	0	12			

II.A.1.b. BILLETS REQUIRED FOR OPERATIONAL AND FLEET SUPPORT ACTIVITIES

ACTIVITY, UIC, PHASING INCREMENT	BILLETS OFF	BILLETS ENL	DESIG/ RATING	PNEC/ PMOS	SNEC/ SMOS
USS Boxer LHD 4, 21808					
ACDU	0	2	AOC	6801	
	0	8	AO1	6801	
	0	2	AO2	6801	
ACTIVITY	0	12			
USS Carl Vinson CVN 70, 20993					
ACDU	0	8	AOC	6801	
	0	29	AO1	6801	
	0	36	AO2	6801	
ACTIVITY	0	73			
USS Essex LHD 2, 21533					
ACDU	0	2	AOC	6801	
	0	7	AO1	6801	
	0	2	AO2	6801	
ACTIVITY	0	11			
USS John C. Stennis CVN 74, 21847					
ACDU	0	9	AOC	6801	
	0	29	AO1	6801	
	0	35	AO2	6801	
SELRES	0	2	AO2	6801	
ACTIVITY	0	75			
USS Kitty Hawk CV63, 03363					
ACDU	0	5	AOC	6801	
	0	25	AO1	6801	
	0	22	AO2	6801	
SELRES	0	1	AOC	6801	
	0	2	AO1	6801	
	0	2	AO2	6801	
USS Kitty Hawk CV63, 03363					
SELRES	0	1	AOC	6801	
	0	2	AO1	6801	
ACTIVITY	0	60			

II.A.1.b. BILLETS REQUIRED FOR OPERATIONAL AND FLEET SUPPORT ACTIVITIES

ACTIVITY, UIC, PHASING INCREMENT	BILLETS OFF	BILLETS ENL	DESIG/ RATING	PNEC/ PMOS	SNEC/ SMOS
USS Abraham Lincoln CVN 72, 21297					
ACDU	0	9	AOC	6801	
	0	29	AO1	6801	
	0	37	AO2	6801	
ACTIVITY	0	75			
USS Nimitz CVN 68, 03368					
ACDU	0	9	AOC	6801	
	0	29	AO1	6801	
	0	37	AO2	6801	
ACTIVITY	0	75			
USS Peleliu LHA 5, 20748					
ACDU	0	2	AOC	6801	
	0	9	AO1	6801	
	0	1	AO2	6801	
ACTIVITY	0	12			
USS Tarawa LHA 1, 20550					
ACDU	0	2	AOC	6801	
	0	9	AO1	6801	
	0	1	AO2	6801	
ACTIVITY	0	12			
VAQ 129, 83896					
USMC	0	1	SGT	6541	
ACTIVITY	0	1			
VFA 125, 53971					
USMC	0	1	SGT	6541	
ACTIVITY	0	1			

II.A.1.b. BILLETS REQUIRED FOR OPERATIONAL AND FLEET SUPPORT ACTIVITIES

ACTIVITY, UIC, PHASING INCREMENT	BILLETS OFF	BILLETS ENL	DESIG/ RATING	PNEC/ PMOS	SNEC/ SMOS
FLEET SUPPORT ACTIVITIES - USMC					
Blout Island Command, 38450					
USMC	0	1	SGT	6541	
	0	1	SSGT	6541	
ACTIVITY	0	2			
FW MALS (East Coast), 00000					
USMC	0	9	CPL	6541	
	0	4	GYSGT	6541	
	0	20	LCPL	6541	
	0	7	SGT	6541	
	0	4	SSGT	6541	
ACTIVITY	0	44			
H&HS MCAS Beaufort SC, 02031					
USMC	0	1	GYSGT	6541	
	0	1	LCPL	6541	
	0	1	SGT	6541	
	0	1	SGT	6541	9954
	0	1	SSGT	6541	
ACTIVITY	0	5			
H&HS MCAS Cherry Point NC, 02002					
USMC	0	4	CPL	6541	
	0	4	SGT	6541	
	0	3	SSGT	6541	
ACTIVITY	0	11			
H&HS MCAS New River NC, 02021					
USMC	0	1	CPL	6541	9954
	0	1	LCPL	6541	
	0	2	SGT	6541	
	0	1	SSGT	6541	
ACTIVITY	0	5			

II.A.1.b. BILLETS REQUIRED FOR OPERATIONAL AND FLEET SUPPORT ACTIVITIES

ACTIVITY, UIC, PHASING INCREMENT	BILLETS OFF	BILLETS ENL	DESIG/ RATING	PNEC/ PMOS	SNEC/ SMOS
MALS 42 (RW), 09513					
USMC	0	1	LCPL	6541	
	0	1	SGT	6541	
AR	0	1	CPL	6541	
	0	1	GYSGT	6541	
	0	1	SSGT	6541	
SMCR	0	1	GYSGT	6541	
	0	3	LCPL	6541	
	0	2	SSGT	6541	
ACTIVITY	0	11			
MALS 49 (RW), 55555					
USMC	0	1	LCPL	6541	
	0	1	SGT	6541	
	0	1	SSGT	6541	
AR	0	2	SSGT	6541	
SMCR	0	1	CPL	6541	
	0	2	GYSGT	6541	
	0	2	LCPL	6541	
ACTIVITY	0	10			
MALS-Rotary Wing (East Coast), 00000					
USMC	0	1	CPL	6541	
	0	2	GYSGT	6541	
	0	5	LCPL	6541	
	0	1	SGT	6541	
	0	3	SSGT	6541	
ACTIVITY	0	12			
MC PERS Dept of Navy Non-Dept, 00000					
USMC	0	2	CPL	6541	
	0	7	GYSGT	6541	
	0	2	SGT	6541	
	0	2	SSGT	6541	
ACTIVITY	0	13			

II.A.1.b. BILLETS REQUIRED FOR OPERATIONAL AND FLEET SUPPORT ACTIVITIES

ACTIVITY, UIC, PHASING INCREMENT	BILLETS OFF	BILLETS ENL	DESIG/ RATING	PNEC/ PMOS	SNEC/ SMOS
VMAT 203, 45483					
USMC	0	3	GYSGT	6541	
	0	1	LCPL	6541	
	0	20	SGT	6541	
	0	4	SSGT	6541	
ACTIVITY	0	28			
Ft Worth, Site Support, 00000					
AR	0	1	GYSGT	6541	
	0	1	SGT	6541	
ACTIVITY	0	2			
FW MALS (West coast), 00000					
USMC	0	9	CPL	6541	
	0	4	GYSGT	6541	
	0	20	LCPL	6541	
	0	7	SGT	6541	
	0	4	SSGT	6541	
ACTIVITY	0	44			
H&HS Futenma Japan, 02601					
USMC	0	2	CPL	6541	
	0	1	GYSGT	6541	
	0	4	LCPL	6541	
	0	3	SGT	6541	
	0	2	SSGT	6541	
ACTIVITY	0	12			
H&HS Iwakuni Japan, 02501					
USMC	0	1	CPL	6541	
	0	1	LCPL	6541	
	0	3	SGT	6541	
	0	2	SSGT	6541	
ACTIVITY	0	7			

II.A.1.b. BILLETS REQUIRED FOR OPERATIONAL AND FLEET SUPPORT ACTIVITIES

ACTIVITY, UIC, PHASING INCREMENT	BILLETS OFF	BILLETS ENL	DESIG/ RATING	PNEC/ PMOS	SNEC/ SMOS
H&HS MCAS Camp Pendelton CA, 02208					
USMC	0	2	CPL	6541	
	0	1	GYSGT	6541	
	0	1	LCPL	6541	
	0	1	SGT	6541	
	0	3	SSGT	6541	
ACTIVITY	0	8			
H&HS MCAS Miramar CA, 02201					
USMC	0	1	CPL	6541	
	0	2	GYSGT	6541	
	0	1	LCPL	6541	
	0	2	SGT	6541	
	0	2	SSGT	6541	
ACTIVITY	0	8			
H&HS MCAS Yuma AZ, 02230					
USMC	0	3	GYSGT	6541	
	0	1	LCPL	6541	
	0	1	SGT	6541	
	0	1	SSGT	6541	
	0	1	SSGT	6541	9954
ACTIVITY	0	7			
HMT 303, 55176					
USMC	0	3	LCPL	6541	
	0	3	SGT	6541	
ACTIVITY	0	6			
MAD China Lake, 06117					
USMC	0	1	GYSGT	6541	
	0	1	SSGT	6541	
ACTIVITY	0	2			
MALS-Rotary Wing (West Coast), 00000					
USMC	0	1	CPL	6541	
	0	2	GYSGT	6541	
	0	5	LCPL	6541	
	0	1	SGT	6541	
	0	3	SSGT	6541	
ACTIVITY	0	12			

II.A.1.b. BILLETS REQUIRED FOR OPERATIONAL AND FLEET SUPPORT ACTIVITIES

ACTIVITY, UIC, PHASING INCREMENT	BILLETS OFF	BILLETS ENL	DESIG/ RATING	PNEC/ PMOS	SNEC/ SMOS
Marine Aviation Logistics Support Element Kaneohe, 02300					
USMC	0	2	CPL	6541	
	0	1	GYSGT	6541	
	0	1	LCPL	6541	
	0	1	SGT	6541	
	0	1	SSGT	6541	
ACTIVITY	0	6			
MAWTS 1 Yuma AZ, 55167					
USMC	0	1	GYSGT	6541	
	0	1	LCPL	6541	
ACTIVITY	0	2			
MCAF Kaneohe Bay HI, 02303					
USMC	0	4	LCPL	6541	
	0	2	SGT	6541	
	0	1	SSGT	6541	
ACTIVITY	0	7			
MCAGCC 29 Palms, 67399					
USMC	0	3	LCPL	6541	
ACTIVITY	0	3			
VMAT 101, 09965					
USMC	0	3	CPL	6541	
	0	6	LCPL	6541	
ACTIVITY	0	9			

II.A.1.c. TOTAL BILLETS REQUIRED FOR OPERATIONAL AND FLEET SUPPORT ACTIVITIES

DESIG/ RATING	PNEC/SNEC PMOS/SMOS	PFYs OFF	PFYs ENL	CFY03 OFF	CFY03 ENL	FY04 OFF	FY04 ENL	FY05 OFF	FY05 ENL	FY06 OFF	FY06 ENL	FY07 OFF	FY07 ENL
USMC OPERATIONAL ACTIVITIES - USMC													
CPL	6541		146		0		0		0		0		0
GYSGT	6541		10		0		0		0		0		0
LCPL	6541		205		0		0		0		0		0
SGT	6541		71		0		0		0		0		0
SSGT	6541		20		0		0		0		0		0
USMC OPERATIONAL ACTIVITIES - AR													
GYSGT	6541		1		0		0		0		0		0
LCPL	6541		1		0		0		0		0		0
SGT	6541		8		0		0		0		0		0
SSGT	6541		6		0		0		0		0		0
USMC OPERATIONAL ACTIVITIES - SMCR													
CPL	6541		11		0		0		0		0		0
GYSGT	6541		6		0		0		0		0		0
LCPL	6541		46		0		0		0		0		0
SGT	6541		9		0		0		0		0		0
SSGT	6541		4		0		0		0		0		0
NAVY FLEET SUPPORT ACTIVITIES - ACDU													
AOC	6801		119		0		0		0		0		0
AOC	6801 9502		5		0		0		0		0		0
AOC	0812 6801		1		0		0		0		0		0
AO1	6801		423		0		0		0		0		0
AO1	6801 0812		1		0		0		0		0		0
AO1	6801 9502		11		0		0		0		0		0
AO1	6801 9549		1		0		0		0		0		0
AO2	6801		417		0		4		0		0		0
AO2	6801 0812		1		0		0		0		0		0
AO2	6801 9502		2		0		0		0		0		0
AO2	6810 6801		1		0		0		0		0		0
AO3	6801		31		0		0		0		0		0
NAVY FLEET SUPPORT ACTIVITIES - SELRES													
AOC	6801		14		1		0		0		0		0
AO1	6801		21		2		0		0		0		0
AO2	6801		24		0		0		0		0		0
NAVY FLEET SUPPORT ACTIVITIES - USMC													
CPL	6541		2		0		0		0		0		0
GYSGT	6541		1		0		0		0		0		0
SGT	6541		5		0		0		0		0		0
SSGT	6541		1		0		0		0		0		0

II.A.1.c. TOTAL BILLETS REQUIRED FOR OPERATIONAL AND FLEET SUPPORT ACTIVITIES

DESIG/ RATING	PNEC/SNEC PMOS/SMOS	PFYs OFF	PFYs ENL	CFY03 OFF	CFY03 ENL	FY04 OFF	FY04 ENL	FY05 OFF	FY05 ENL	FY06 OFF	FY06 ENL	FY07 OFF	FY07 ENL
USMC FLEET SUPPORT ACTIVITIES - USMC													
CPL	6541		67		0		0		0		0		0
CPL	6541 9954		1		0		0		0		0		0
GYSGT	6541		51		0		0		0		0		0
LCPL	6541		156		0		0		0		0		0
SGT	6541		88		0		0		0		0		0
SGT	6541 9954		1		0		0		0		0		0
SSGT	6541		61		0		0		0		0		0
SSGT	6541 9954		1		0		0		0		0		0
USMC FLEET SUPPORT ACTIVITIES - AR													
CPL	6541		1		0		0		0		0		0
GYSGT	6541		2		0		0		0		0		0
SGT	6541		1		0		0		0		0		0
SSGT	6541		3		0		0		0		0		0
USMC FLEET SUPPORT ACTIVITIES - SMCR													
CPL	6541		1		0		0		0		0		0
GYSGT	6541		3		0		0		0		0		0
LCPL	6541		5		0		0		0		0		0
SSGT	6541		2		0		0		0		0		0

II.A.1.c. TOTAL BILLETS REQUIRED FOR OPERATIONAL AND FLEET SUPPORT ACTIVITIES

DESIG/ RATING	PNEC/SNEC PMOS/SMOS	PFYs OFF	PFYs ENL	CFY03 OFF	CFY03 ENL	FY04 OFF	FY04 ENL	FY05 OFF	FY05 ENL	FY06 OFF	FY06 ENL	FY07 OFF	FY07 ENL
SUMMARY TOTALS:													
USMC OPERATIONAL ACTIVITIES - USMC													
	452			0		0		0		0		0	
USMC OPERATIONAL ACTIVITIES - AR													
	16			0		0		0		0		0	
USMC OPERATIONAL ACTIVITIES - SMCR													
	76			0		0		0		0		0	
NAVY FLEET SUPPORT ACTIVITIES - ACDU													
	937			75		0		4		0		0	
NAVY FLEET SUPPORT ACTIVITIES - SELRES													
	59			0		3		0		0		0	
NAVY FLEET SUPPORT ACTIVITIES - USMC													
	9			0		0		0		0		0	
USMC FLEET SUPPORT ACTIVITIES - USMC													
	426			0		0		0		0		0	
USMC FLEET SUPPORT ACTIVITIES - AR													
	7			0		0		0		0		0	
USMC FLEET SUPPORT ACTIVITIES - SMCR													
	11			0		0		0		0		0	

II.A.1.c. TOTAL BILLETS REQUIRED FOR OPERATIONAL AND FLEET SUPPORT ACTIVITIES

DESIG/ RATING	PNEC/SNEC PMOS/SMOS	PFYs OFF	PFYs ENL	CFY03 OFF	CFY03 ENL	FY04 OFF	FY04 ENL	FY05 OFF	FY05 ENL	FY06 OFF	FY06 ENL	FY07 OFF	FY07 ENL
GRAND TOTALS:													
NAVY - ACDU			1012		0		4		0		0		0
NAVY - SELRES			59		3		0		0		0		0
NAVY - USMC			9		0		0		0		0		0
USMC - USMC			878		0		0		0		0		0
USMC - AR			23		0		0		0		0		0
USMC - SMCR			87		0		0		0		0		0

II.A.2.a. OPERATIONAL AND FLEET SUPPORT ACTIVITY DEACTIVATION SCHEDULE

SOURCE: USN: Total Force Manpower Management System, TFMMS **DATE:** 5/1/01
USMC: Extracted from Table of Manpower Requirements, TFS MCCDC **DATE:** 5/1/01

ACTIVITY, UIC		PFYs	CFY03	FY04	FY05	FY06	FY07
FLEET SUPPORT ACTIVITIES - NAVY							
USS Constellation CV64	03364	0	1	0	0	0	0
TOTAL:		0	1	0	0	0	0

II.A.2.b. BILLETS TO BE DELETED FOR OPERATIONAL AND FLEET SUPPORT ACTIVITIES

ACTIVITY, UIC, PHASING INCREMENT	BILLETS OFF	BILLETS ENL	DESIG/ RATING	PNEC/ PMOS	SNEC/ SMOS
FLEET SUPPORT ACTIVITIES - NAVY					
USS Kitty Hawk CV63, 03363, FY03 Increment					
ACDU	0	1	AOC	6801	
	0	2	AO1	6801	
ACTIVITY	0	3			

II.A.2.c. TOTAL BILLETS TO BE DELETED IN OPERATIONAL AND FLEET SUPPORT ACTIVITIES

DESIG/ RATING	PNEC/SNEC PMOS/SMOS	PFYs OFF	PFYs ENL	CFY03 OFF	CFY03 ENL	FY04 OFF	FY04 ENL	FY05 OFF	FY05 ENL	FY06 OFF	FY06 ENL	FY07 OFF	FY07 ENL
NAVY FLEET SUPPORT ACTIVITIES - ACDU													
AOC	6801		11		-7		0		0		0		0
AO1	6801		35		-12		0		0		0		0
SUMMARY TOTALS:													
NAVY FLEET SUPPORT ACTIVITIES - ACDU													
			46		-19		0		0		0		0
GRAND TOTALS:													
NAVY - ACDU													
			46		-19		0		0		0		0

II.A.3. TRAINING ACTIVITIES INSTRUCTOR AND SUPPORT BILLET REQUIREMENTS

DESIG RATING	PNEC/SNEC PMOS/SMOS	PFYs OFF	PFYs ENL	CFY03 OFF	CFY03 ENL	FY04 OFF	FY04 ENL	FY05 OFF	FY05 ENL	FY06 OFF	FY06 ENL	FY07 OFF	FY07 ENL
TRAINING ACTIVITY, LOCATION, UIC: MTU-4030 NAMTRAU, Mayport, 66069													
INSTRUCTOR BILLETS													
ACDU													
AOC	6801 9502	0	2	0	2	0	2	0	2	0	2	0	2
AO1	6801 9502	0	2	0	2	0	2	0	2	0	2	0	2
TOTAL:		0	4	0	4	0	4	0	4	0	4	0	4
TRAINING ACTIVITY, LOCATION, UIC: MTU-4032 NAMTRAU Norfolk, 66046													
INSTRUCTOR BILLETS													
ACDU													
AOC	6801 9502	0	1	0	1	0	1	0	1	0	1	0	1
AO1	6801 9502	0	3	0	3	0	3	0	3	0	3	0	3
TOTAL:		0	4	0	4	0	4	0	4	0	4	0	4
TRAINING ACTIVITY, LOCATION, UIC: MTU-4033 NAMTRAU, North Island, 66065													
INSTRUCTOR BILLETS													
ACDU													
AO1	6801 9502	0	2	0	2	0	2	0	2	0	2	0	2
AO2	6801 9502	0	2	0	2	0	2	0	2	0	2	0	2
TOTAL:		0	4	0	4	0	4	0	4	0	4	0	4
TRAINING ACTIVITY, LOCATION, UIC: MTU-4034 NAMTRA MARUNIT, MCAS Cherry Point, 45483													
INSTRUCTOR BILLETS													
USMC													
GYSGT	6541	0	0	0	0	0	0	0	0	0	0	0	0
SGT	6541	0	19	0	19	0	19	0	19	0	19	0	19
SSGT	6541	0	2	0	2	0	2	0	2	0	2	0	2
TOTAL:		0	21	0	21	0	21	0	21	0	21	0	21

II.A.3. TRAINING ACTIVITIES INSTRUCTOR AND SUPPORT BILLET REQUIREMENTS

DESIG	PNEC/SNEC	PFYs		CFY03		FY04		FY05		FY06		FY07	
RATING	PMOS/SMOS	OFF	ENL	OFF	ENL	OFF	ENL	OFF	ENL	OFF	ENL	OFF	ENL
TRAINING ACTIVITY, LOCATION, UIC: MTU-4035 NAMTRAU, Whidbey Island, 66058													
INSTRUCTOR BILLETS													
ACDU													
AOC	6801 9502	0	1	0	1	0	1	0	1	0	1	0	1
AO1	6801 9502	0	2	0	2	0	2	0	2	0	2	0	2
TOTAL:		0	3	0	3	0	3	0	3	0	3	0	3

II.A.4. CHARGEABLE STUDENT BILLET REQUIREMENTS

ACTIVITY, LOCATION, UIC	USN/ USMC	PFYs OFF	PFYs ENL	CFY03 OFF	CFY03 ENL	FY04 OFF	FY04 ENL	FY05 OFF	FY05 ENL	FY06 OFF	FY06 ENL	FY07 OFF	FY07 ENL
MTU-4030 NAMTRAU, Mayport, 66069													
	NAVY		1.9		1.9		1.9		1.9		1.9		1.9
MTU-4032 NAMTRAU Norfolk, 66046													
	NAVY		19.3		12.1		12.5		12.1		12.1		12.1
MTU-4034 NAMTRA MARUNIT, MCAS Cherry Point, 45483													
	USMC		47.7		47.7		47.7		47.7		47.7		47.7
MTU-4033 NAMTRAU, North Island, 66065													
	NAVY		8.0		7.9		7.4		7.4		7.4		7.4
MTU-4035 NAMTRAU, Whidbey Island, 66058													
	NAVY		3.6		3.6		3.6		3.6		3.6		3.6
SUMMARY TOTALS:													
	NAVY		24.9		25.5		25.4		25.0		25.0		25.0
	USMC		47.7		47.7		47.7		47.7		47.7		47.7
GRAND TOTALS:													
			80.5		73.2		73.1		73.7		72.7		72.7

II.A.5. ANNUAL INCREMENTAL AND CUMULATIVE BILLETS

DESIG/ RATING	PNEC/ PMOS	SNEC/ SMOS	BILLET BASE	CFY03 +/-	CFY03 CUM	FY04 +/-	FY04 CUM	FY04 +/-	FY04 CUM	FY04 +/-	FY04 CUM	FY04 +/-	FY04 CUM
a. OFFICER - USN				NA									
b. ENLISTED - USN													
Fleet Support Billets ACDU and TAR													
AOC	6801		118	-7	111	0	111	0	111	0	111	0	111
AOC	6801	9502	5	0	5	0	5	0	5	0	5	0	5
AOC	0812	6801	1	0	1	0	1	0	1	0	1	0	1
AO1	6801		423	-12	411	0	411	0	411	0	411	0	411
AO1	6801	812	1	0	1	0	1	0	1	0	1	0	1
AO1	6801	9502	11	0	11	0	11	0	11	0	11	0	11
AO1	6801	9549	1	0	1	0	1	0	1	0	1	0	1
AO2	6801		417	0	417	4	421	0	421	0	421	0	421
AO2	6801	812	1	0	1	0	1	0	1	0	1	0	1
AO2	6801	9502	2	0	2	0	2	0	2	0	2	0	2
AO2	6810	6801	1	0	1	0	1	0	1	0	1	0	1
AO3	6801		31	0	31	0	31	0	31	0	31	0	31
Staff Billets ACDU and TAR													
AOC	6801	9502	4	0	4	0	4	0	4	0	4	0	4
AO1	6801	9502	9	0	9	0	9	0	9	0	9	0	9
AO2	6801	9502	2	0	2	0	2	0	2	0	2	0	2
Chargeable Student Billets ACDU and TAR													
			33	-7	26	-1	25	0	25	0	25	0	25
SELRES Billets													
AOC	6801		14	1	15	0	15	0	15	0	15	0	15
AO1	6801		21	2	23	0	23	0	23	0	23	0	23
AO2	6801		24	0	24	0	24	0	24	0	24	0	24
TOTAL USN ENLISTED BILLETS:													
Fleet Support			1036	-99	937	75	1012	-19	993	4	997	0	997
Staff			15	0	15	0	15	0	15	0	15	0	15
Chargeable Student			25	8	33	-7	26	-1	25	0	25	0	25
SELRES			59	0	59	3	62	0	62	0	62	0	62

II.A.5. ANNUAL INCREMENTAL AND CUMULATIVE BILLETS

DESIG/ RATING	PNEC/ PMOS	SNEC/ SMOS	BILLET BASE	CFY03 +/-	CFY03 CUM	FY04 +/-	FY04 CUM	FY05 +/-	FY05 CUM	FY06 +/-	FY06 CUM	FY07 +/-	FY07 CUM
c. OFFICER - USMC				NA									
d. ENLISTED - USMC													
Operational Billets USMC and AR													
CPL	6541		146	0	146	0	146	0	146	0	146	0	146
GYSGT	6541		11	0	11	0	11	0	11	0	11	0	11
LCPL	6541		206	0	206	0	206	0	206	0	206	0	206
SGT	6541		79	0	79	0	79	0	79	0	79	0	79
SSGT	6541		26	0	26	0	26	0	26	0	26	0	26
Fleet Support Billets USMC and AR													
CPL	6541		70	0	70	0	70	0	70	0	70	0	70
CPL	6541	9954	1	0	1	0	1	0	1	0	1	0	1
GYSGT	6541		54	0	54	0	54	0	54	0	54	0	54
LCPL	6541		156	0	156	0	156	0	156	0	156	0	156
SGT	6541		94	0	94	0	94	0	94	0	94	0	94
SGT	6541	9954	1	0	1	0	1	0	1	0	1	0	1
SSGT	6541		65	0	65	0	65	0	65	0	65	0	65
SSGT	6541	9954	1	0	1	0	1	0	1	0	1	0	1
Staff Billets USMC and AR													
GYSGT	6541		0	0	0	0	0	0	0	0	0	0	0
SGT	6541		19	0	19	0	19	0	19	0	19	0	19
SSGT	6541		2	0	2	0	2	0	2	0	2	0	2
Chargeable Student Billets USMC and AR													
			48	0	48	0	48	0	48	0	48	0	48
SMCR Billets													
CPL	6541		12	0	12	0	12	0	12	0	12	0	12
GYSGT	6541		9	0	9	0	9	0	9	0	9	0	9
LCPL	6541		51	0	51	0	51	0	51	0	51	0	51
SGT	6541		9	0	9	0	9	0	9	0	9	0	9
SSGT	6541		6	0	6	0	6	0	6	0	6	0	6
TOTAL USMC ENLISTED BILLETS:													
Operational			468	0	468	0	468	0	468	0	468	0	468
Fleet Support			442	0	442	0	442	0	442	0	442	0	442

II.A.5. ANNUAL INCREMENTAL AND CUMULATIVE BILLETS

DESIG/ RATING	PNEC/ PMOS	SNEC/ SMOS	BILLET BASE	CFY03 +/-	CFY03 CUM	FY04 +/-	FY04 CUM	FY05 +/-	FY05 CUM	FY06 +/-	FY06 CUM	FY07 +/-	FY07 CUM
Staff			21	0	21	0	21	0	21	0	21	0	21
Chargeable Student			48	0	48	0	48	0	48	0	48	0	48
SMCR			87	0	87	0	87	0	87	0	87	0	87

II.B. PERSONNEL REQUIREMENTS

II.B.1. ANNUAL TRAINING INPUT REQUIREMENTS

CIN, COURSE TITLE: D-646-7007, General Shipboard/NAS Weapons Department AVORD Maintenance
COURSE LENGTH: 7.0 Weeks **TOUR LENGTH:** 60 Months
ATTRITION Navy: 10% USMC: 0% **BACKOUT FACTOR:** 0.14

TRAINING		ACDU/TAR	CFY03		FY04		FY05		FY06		FY07	
ACTIVITY	SOURCE	SELRES	OFF	ENL	OFF	ENL	OFF	ENL	OFF	ENL	OFF	ENL
MTU-4030 NAMTRAU, Mayport												
	NAVY	ACDU		15		15		15		15		15
		SELRES		1		1		1		1		1
MTU-4032 NAMTRAU Norfolk												
	NAVY	ACDU		95		98		95		95		95
		SELRES		4		4		4		4		4
		TOTAL:		115		118		115		115		115

CIN, COURSE TITLE: E-646-7007, General Shipboard /NAS Weapons Department Maintenance
COURSE LENGTH: 6.0 Weeks **TOUR LENGTH:** 60 Months
ATTRITION Navy: 10% USMC: 0% **BACKOUT FACTOR:** 0.12

TRAINING		ACDU/TAR	CFY03		FY04		FY05		FY06		FY07	
ACTIVITY	SOURCE	SELRES	OFF	ENL	OFF	ENL	OFF	ENL	OFF	ENL	OFF	ENL
MTU-4033 NAMTRAU, North Island												
	NAVY	ACDU		72		68		68		68		68
		SELRES		1		1		1		1		1
MTU-4035 NAMTRAU, Whidbey Island												
	NAVY	ACDU		33		33		33		33		33
		TOTAL:		106		102		102		102		102

CIN, COURSE TITLE: M-646-7026, Aircraft Ordnance Intermediate Maintenance
COURSE LENGTH: 11.0 Weeks **TOUR LENGTH:** 36 Months
ATTRITION Navy: 0% USMC: 0% **BACKOUT FACTOR:** 0.22

TRAINING		ACDU/TAR	CFY03		FY04		FY05		FY06		FY07	
ACTIVITY	SOURCE	SELRES	OFF	ENL	OFF	ENL	OFF	ENL	OFF	ENL	OFF	ENL
MTU-4034 NAMTRA MARUNIT, MCAS Cherry Point												
	USMC	USMC		220		220		220		220		220
		AR		6		6		6		6		6
		SMCR		9		9		9		9		9
		TOTAL:		235		235		235		235		235

PART III - TRAINING REQUIREMENTS

The following elements are not affected by the AIM-120 Advanced Medium Range Air-to-Air Missile and, therefore, are not included in Part III of this NTSP:

III.A.1. Initial Training Requirements

III.A.2. Follow-on Training

- III.A.2.b. Planned Courses
- III.A.2.c. Unique Courses

III.A.3. Existing Training Phased Out

PART III - TRAINING REQUIREMENTS

III.A. TRAINING COURSE REQUIREMENTS

III.A.2. FOLLOW-ON TRAINING

III.A.2.a. EXISTING COURSES

CIN, COURSE TITLE: D-646-7007, General Shipboard/NAS Weapons Department AVORD Maintenance
TRAINING ACTIVITY: MTU-4030
LOCATION, UIC: NAMTRAGRU DET Mayport, 66069

SOURCE: NAVY **STUDENT CATEGORY:** ACDU - TAR

CFY03		FY04		FY05		FY06		FY07		
OFF	ENL	OFF	ENL	OFF	ENL	OFF	ENL	OFF	ENL	
	15		15		15		15		15	ATIR
	14		14		14		14		14	Output
	1.9		1.9		1.9		1.9		1.9	AOB
	1.9		1.9		1.9		1.9		1.9	Chargeable

SOURCE: NAVY **STUDENT CATEGORY:** SELRES

CFY03		FY04		FY05		FY06		FY07		
OFF	ENL	OFF	ENL	OFF	ENL	OFF	ENL	OFF	ENL	
	1		1		1		1		1	ATIR
	1		1		1		1		1	Output
	0.1		0.1		0.1		0.1		0.1	AOB
	0.0		0.0		0.0		0.0		0.0	Chargeable

TRAINING ACTIVITY: MTU-4032
LOCATION, UIC: NAMTRAU Norfolk, 66046

SOURCE: NAVY **STUDENT CATEGORY:** ACDU - TAR

CFY03		FY04		FY05		FY06		FY07		
OFF	ENL	OFF	ENL	OFF	ENL	OFF	ENL	OFF	ENL	
	151		95		98		95		95	ATIR
	86		88		86		86		86	Output
	12.1		12.5		12.1		12.1		12.1	AOB
	12.1		12.5		12.1		12.1		12.1	Chargeable

SOURCE: NAVY **STUDENT CATEGORY:** SELRES

CFY03		FY04		FY05		FY06		FY07		
OFF	ENL	OFF	ENL	OFF	ENL	OFF	ENL	OFF	ENL	
	4		4		4		4		4	ATIR
	4		4		4		4		4	Output
	0.5		0.5		0.5		0.5		0.5	AOB
	0.0		0.0		0.0		0.0		0.0	Chargeable

III.A.2.a. EXISTING COURSES

CIN, COURSE TITLE: E-646-7007, General Shipboard /NAS Weapons Department Maintenance
TRAINING ACTIVITY: MTU-4033
LOCATION, UIC: NAMTRAU North Island, 66065

SOURCE: NAVY **STUDENT CATEGORY:** ACDU - TAR

CFY03		FY04		FY05		FY06		FY07		
OFF	ENL	OFF	ENL	OFF	ENL	OFF	ENL	OFF	ENL	
	72		68		68		68		86	ATIR
	65		61		61		61		61	Output
	7.9		7.4		7.4		7.4		7.4	AOB
	7.9		7.4		7.4		7.4		7.4	Chargeable

SOURCE: NAVY **STUDENT CATEGORY:** SELRES

CFY03		FY04		FY05		FY06		FY07		
OFF	ENL	OFF	ENL	OFF	ENL	OFF	ENL	OFF	ENL	
	1		1		1		1		1	ATIR
	1		1		1		1		1	Output
	0.1		0.1		0.1		0.1		0.1	AOB
	0.0		0.0		0.0		0.0		0.0	Chargeable

TRAINING ACTIVITY: MTU-4035
LOCATION, UIC: NAMTRAU Whidbey Island, 66058

SOURCE: NAVY **STUDENT CATEGORY:** ACDU - TAR

CFY03		FY04		FY05		FY06		FY07		
OFF	ENL	OFF	ENL	OFF	ENL	OFF	ENL	OFF	ENL	
	33		33		33		33		33	ATIR
	30		30		30		30		30	Output
	3.6		3.6		3.6		3.6		3.6	AOB
	3.6		3.6		3.6		3.6		3.6	Chargeable

CIN, COURSE TITLE: M-646-7026, Aircraft Ordnance Intermediate Maintenance
TRAINING ACTIVITY: MTU-4034 NAMTRA MARU
LOCATION, UIC: MCAS Cherry Point, 45483

SOURCE: USMC **STUDENT CATEGORY:** USMC - AR

CFY03		FY04		FY05		FY06		FY07		
OFF	ENL	OFF	ENL	OFF	ENL	OFF	ENL	OFF	ENL	
	226		226		226		226		226	ATIR
	226		226		226		226		226	Output
	47.7		47.7		47.7		47.7		47.7	AOB
	47.7		47.7		47.7		47.7		47.7	Chargeable

III.A.2.a. EXISTING COURSES

SOURCE: USMC **STUDENT CATEGORY:** SMCR

CFY03		FY04		FY05		FY06		FY07		
OFF	ENL	OFF	ENL	OFF	ENL	OFF	ENL	OFF	ENL	
	9		9		9		9		9	ATIR
	9		9		9		9		9	Output
	1.9		1.9		1.9		1.9		1.9	AOB
	0.0		0.0		0.0		0.0		0.0	Chargeable

PART IV - TRAINING LOGISTICS SUPPORT REQUIREMENTS

The following elements are not affected by the AIM-120 Advanced Medium Range Air-to-Air Missile and, therefore, are not included in Part IV of this NTSP:

IV.B.1. Training Services

IV.C. Facility Requirements

- IV.C.1 Facility Requirements Summary (Space/Support) by Activity
- IV.C.2. Facility Requirements Detailed by Activity and Course
- IV.C.3. Facility Project Summary by Program

NOTE: No new or modified training facilities are required for the AIM-120A/B/C.

IV.A. TRAINING HARDWARE

IV.A.1. TTE/GPTE/SPTE/ST/GPETE/SPETE

TRAINING ACTIVITY: NATTC, AO "A" School
LOCATION, UIC: NAS Pensacola, 63082
CIN, COURSE TITLE: C-646-2011, Aviation Ordnanceman Common Core Class A1
C-646-2012, Aviation Ordnanceman Navy Difference Training Strand Class A1

ITEM NUMBER	EQUIPMENT	TYPE OR RANGE OF REPAIR PARTS	QUANT REQD	DATE REQD	GFE CFE	STATUS
TTE						
001	LAU-127A/A launcher		2	NA	GFE	On board
002	ADU-629/E N_2 receiver insert adapter		1	NA	GFE	On board
003	ADU-729/E N_2 receiver transport adapter		1	NA	GFE	On board
004	A/E37T-35 CRALTS		1	NA	GFE	On board
SPTE						
001	AN/AWM-96		1	NA	GFE	On board
002	Launcher Detent Test Set		1	NA	GFE	On board
003	Detent Test Adapter Block		1	NA	GFE	On board
004	Umbilical Mechanism Adjustment Tool		1	NA	GFE	On board
005	Dampener/Striker Point Gauge Set		1	NA	GFE	On board

TRAINING ACTIVITY: SFWS Atlantic
LOCATION, UIC: NAS Oceana, 47084
CIN, COURSE TITLE: D-646-0640, F/A-18 Conventional Weapons Loading
D-646-0647 F/A-18 Conventional Release System Test

ITEM NUMBER	EQUIPMENT	TYPE OR RANGE OF REPAIR PARTS	QUANT REQD	DATE REQD	GFE CFE	STATUS
TTE						
001	LAU-127A/A launcher		2	NA	GFE	On board
005	CNU-415C/E container		1	NA	GFE	On board
SPTE						
001	AN/AWM-96		1	NA	GFE	On board

TRAINING ACTIVITY: SFWS Pacific
LOCATION, UIC: NAS Lemoore, 35185
CIN, COURSE TITLE: E-646-0640, F/A-18 Conventional Weapons Loading
E-646-0647 F/A-18 Conventional Release System Test

ITEM NUMBER	EQUIPMENT	TYPE OR RANGE OF REPAIR PARTS	QUANT REQD	DATE REQD	GFE CFE	STATUS
TTE						
001	LAU-127A/A launcher		2	NA	GFE	On board
005	CNU-415C/E container		1	NA	GFE	On board
SPTE						
001	AN/AWM-96		1	NA	GFE	On board

IV.A.1. TTE/GPTE/SPTE/ST/GPETE/SPETE

TRAINING ACTIVITY: MTU-4030 NAMTRAGRUDET
LOCATION, UIC: NS Mayport, 66069
CIN, COURSE TITLE: C-122-3111, Air Launched Guided Missiles Intermediate Maintenance
C-646-4109, Weapons Department General Aviation Ordnance

ITEM NUMBER	EQUIPMENT	TYPE OR RANGE OF REPAIR PARTS	QUANT REQD	DATE REQD	GFE CFE	STATUS
SPTE						
006	CFMRE or similar		1	NA	GFE	See Note[1]

TRAINING ACTIVITY: MTU-4032 NAMTRAU
LOCATION, UIC: NAS Norfolk, 66046
CIN, COURSE TITLE: C-122-3111, Air Launched Guided Missiles Intermediate Maintenance
C-646-3118, Strike Armament Systems Intermediate Maintenance
C-646-4109, Weapons Department General Aviation Ordnance

ITEM NUMBER	EQUIPMENT	TYPE OR RANGE OF REPAIR PARTS	QUANT REQD	DATE REQD	GFE CFE	STATUS
TTE						
001	LAU-127A/A launcher		2	NA	GFE	On board
002	ADU-629/E N_2 receiver insert adapter		1	NA	GFE	On board
003	ADU-729/E N_2 receiver transport adapter		1	NA	GFE	On board
004	A/E37T-35 CRALTS		3	NA	GFE	On board
SPTE						
002	Launcher Detent Test Set		1	NA	GFE	On board
003	Detent Test Adapter Block		1	NA	GFE	On board
004	Umbilical Mechanism Adjustment Tool		1	NA	GFE	On board
005	Dampener/Striker Point Gauge Set		1	NA	GFE	On board
006	CFMRE or similar		1	NA	GFE	See Note[7]

[1] CFMRE (AN/GYQ-75A(V)) is no longer available to procure due to component obsolescence and subsequent prohibitive costs. Follow-on/replacement CFMRE systems will be procured for I-level Schoolhouses.

IV.A.1. TTE/GPTE/SPTE/ST/GPETE/SPETE

TRAINING ACTIVITY: MTU-4033 NAMTRAU
LOCATION, UIC: NAS North Island, 66065
CIN, COURSE TITLE: C-122-3111, Air Launched Guided Missiles Intermediate Maintenance
C-646-3118, Strike Armament Systems Intermediate Maintenance
C-646-4109, Weapons Department General Aviation Ordnance

ITEM NUMBER	EQUIPMENT	TYPE OR RANGE OF REPAIR PARTS	QUANT REQD	DATE REQD	GFE CFE	STATUS
TTE						
001	LAU-127A/A launcher		2	NA	GFE	On board
002	ADU-629/E N_2 receiver insert adapter		1	NA	GFE	On board
003	ADU-729/E N_2 receiver transport adapter		1	NA	GFE	On board
004	A/E37T-35 CRALTS		3	NA	GFE	On board
SPTE						
002	Launcher Detent Test Set		1	NA	GFE	On board
003	Detent Test Adapter Block		1	NA	GFE	On board
004	Umbilical Mechanism Adjustment Tool		1	NA	GFE	On board
005	Dampener/Striker Point Gauge Set		1	NA	GFE	On board
006	CFMRE or similar		1	NA	GFE	See Note[7]

TRAINING ACTIVITY: MTU-4034 NAMTARMARU
LOCATION, UIC: MCAS Cherry Point, 66047
CIN, COURSE TITLE: C-646-3105, Aviation Ordnance Intermediate Maintenance Technician

ITEM NUMBER	EQUIPMENT	TYPE OR RANGE OF REPAIR PARTS	QUANT REQD	DATE REQD	GFE CFE	STATUS
TTE						
001	LAU-127A/A launcher		2	NA	GFE	On board
002	ADU-629/E N_2 receiver insert adapter		1	NA	GFE	On board
003	ADU-729/E N_2 receiver transport adapter		1	NA	GFE	On board
004	A/E37T-35 CRALTS		6	NA	GFE	On board
SPTE						
002	Launcher Detent Test Set		1	NA	GFE	On board
003	Detent Test Adapter Block		1	NA	GFE	On board
004	Umbilical Mechanism Adjustment Tool		1	NA	GFE	On board
005	Dampener/Striker Point Gauge Set		1	NA	GFE	On board
006	CFMRE or similar		1	NA	GFE	See Note[7]

IV.A.1. TTE/GPTE/SPTE/ST/GPETE/SPETE

TRAINING ACTIVITY: MTU-4035 NAMTRAU
LOCATION, UIC: NAS Whidbey Island, 66058
CIN, COURSE TITLE: C-122-3111, Air Launched Guided Missiles Intermediate Maintenance
C-646-4109, Weapons Department General Aviation Ordnance

ITEM NUMBER	EQUIPMENT	TYPE OR RANGE OF REPAIR PARTS	QUANT REQD	DATE REQD	GFE CFE	STATUS
SPTE 006	CFMRE or similar		1	NA	GFE	See Note[7]

TRAINING ACTIVITY: NAVSCOLEOD/
LOCATION, UIC: Eglin AFB, 62640
CIN, COURSE TITLE: A-431-0011 EOD Phase II Navy
A-431-0012 EOD Phase II

ITEM NUMBER	EQUIPMENT	TYPE OR RANGE OF REPAIR PARTS	QUANT REQD	DATE REQD	GFE CFE	STATUS
TTE 001	LAU-127A/A launcher		1	NA	GFE	On board

TRAINING ACTIVITY: EODTEU ONE
LOCATION, UIC: San Diego, 30302
CIN, COURSE TITLE: G-431-0001 Navy EOD Team Training

ITEM NUMBER	EQUIPMENT	TYPE OR RANGE OF REPAIR PARTS	QUANT REQD	DATE REQD	GFE CFE	STATUS
TTE 001	LAU-127A/A launcher		1	NA	GFE	On board

TRAINING ACTIVITY: EODTEU TWO
LOCATION, UIC: Fort Story, 43505
CIN, COURSE TITLE: G-431-0001 Navy EOD Team Training

ITEM NUMBER	EQUIPMENT	TYPE OR RANGE OF REPAIR PARTS	QUANT REQD	DATE REQD	GFE CFE	STATUS
TTE 001	LAU-127A/A launcher		1	NA	GFE	On board

DEVICE:	Captive Air Training Missile (CATM)
DESCRIPTION OF DEVICE:	CATM is a replica of the AMRAAM, not currently flight-certified, ballasted to replicate the actual size, weight, and center of gravity of the tactical missile.
MANUFACTURER:	Marvin Engineering
CONTRACT NUMBER:	FO826-92-0011
TEE STATUS:	NA

TRAINING ACTIVITY LOCATION, UIC	QUANT REQD	DATE REQD	RFT DATE	STATUS	COURSES SUPPORTED
AO "A1" School					C-646-2011
NATTC NAS Pensacola, 63093					C-646-2012
CATM-120B	2			On board	
CATM-120C	2			On board	
SFWS Atlantic					D-646-0640
NAS Cecil Field, 47084					D-646-0647
CATM-120B	4			On board	
CATM-120C	4			On board	
SFWS Pacific					E-646-0640
NAS Lemoore, 35185					E-646-0647
CATM-120B	4			On board	
CATM-120C	4			On board	
MTU-4030 NAMTRAGRU DET					C-122-3111
NS Mayport, 66069					
CATM-120B	2			On board	
CATM-120C	2			On board	
MTU-4032 NAMTRAU					C-122-3111
NAS Norfolk, 66046					
CATM-120B	2			On board	
CATM-120C	2			On board	
MTU-4033 NAMTRAU					C-122-3111
NAS North Island, 66065					
CATM-120B	2			On board	
CATM-120C	2			On board	
MTU-4034 NAMTRAMARU					C-646-3105
MCAS Cherry Point, 66047					
CATM-120B	2			On board	
CATM-120C	2			On board	

TRAINING ACTIVITY LOCATION, UIC	QUANT REQD	DATE REQD	RFT DATE	STATUS	COURSES SUPPORTED
MTU-4035 NAMTRAU NAS Whidbey Island, 66058					C-122-3111
CATM-120B	2	FY99	FY00	Available	
CATM-120C	2	FY99	FY00	Available	
NAF Washington Andrews AFB, Maryland, 00166					F/A-18 Conventional Weapons Loading
CATM-120B	2			On board	
CATM-120C	2			On board	
NAS Atlanta Marietta, Georgia, 00196					F/A-18 Conventional Weapons Loading
CATM-120B	2			On board	
CATM-120C	2			On board	
Joint Reserve Base (JRB) New Orleans New Orleans, Louisiana, 00206					F/A-18 Conventional Weapons Loading
CATM-120B	2			On board	
CATM-120C	2			On board	
JRB Fort Worth Fort Worth, Texas, 00215					F/A-18 Conventional Weapons Loading
CATM-120B	2			On board	
CATM-120C	2			On board	
TOTAL:	56				

DEVICE: AMRAAM Captive Carriage Reliability Vehicle (CCRV)

DESCRIPTION OF DEVICE: The AMRAAM CCRV is a tactical missile with inert armament and propulsion sections. It is used at SFWSL and SFWSP for the AMRAAM CWTPI because it allows post-load BIT to complete the AMRAAM loading checklist.

MANUFACTURER: Raytheon Missile Systems Company

CONTRACT NUMBER: NA.

TEE STATUS: NA

TRAINING ACTIVITY LOCATION, UIC	QUANT REQD	DATE REQD	RFT DATE	STATUS	COURSES SUPPORTED
SFWS Atlantic NAS Cecil Field, 47084	2			On board	D-646-0640 D-646-0647
SFWS Pacific NAS Lemoore, 35185	2			On board	D-646-0640 D-646-0647

DEVICE: CNU-555/E, CATM-120 (series) Shipping Container

DESCRIPTION OF DEVICE: CNU-555/E is a replica of the AMRAAM shipping container, CNU-415C/E.

MANUFACTURER: Marvin Engineering

CONTRACT NUMBER: FO826-92-0011

TEE STATUS: NA

TRAINING ACTIVITY LOCATION, UIC	QUANT REQD	DATE REQD	RFT DATE	STATUS	COURSES SUPPORTED
AO "A1" School NATTC NAS Pensacola, 63093	1			Retrofit Scheduled[2]	C-646-2011 C-646-2012
MTU-4030 NAMTRAGRU DET NS Mayport, 66069	2			Retrofit Completed	C-122-3111
MTU-4032 NAMTRAU NAS Norfolk, 66046	1			Retrofit Scheduled	C-122-3111
MTU-4033 NAMTRAU NAS North Island, 66065	2			Retrofit Completed	C-122-3111
MTU-4034 NAMTRAMARU MCAS Cherry Point, 66047	2			Retrofit Completed	C-646-3105
MTU-4035 NAMTRAU NAS Whidbey Island, 66058	2			Retrofit Scheduled	C-122-3111
NAF Washington Andrews AFB, Maryland, 00166	1			Retrofit Scheduled	Conventional Weapons Proficiency
JRB Atlanta Marietta, Georgia, 00196	1			Retrofit Scheduled	Conventional Weapons Proficiency
JRB New Orleans New Orleans, Louisiana, 00206	1			Retrofit Scheduled	Conventional Weapons Proficiency
JRB Fort Worth Fort Worth, Texas, 00215	1			Retrofit Scheduled	Conventional Weapons Proficiency
TOTAL:	12				

DEVICE: Practical Explosive Ordnance Disposal System Trainer (PEST)

DESCRIPTION OF DEVICE: The AIM-120 PEST is a full scale model of the AIM-120A, having approximately the same weight and center of gravity as the tactical missile. The AIM-120 PEST is used in the field for hands-on training and practice of rendering safe procedures. The AIM-120 PEST has easily replaceable parts that are built into the missile where EOD procedures indicate destructive type work for EOD training. Electrical parts not required for EOD procedures are identical in external configuration, weight, and center of gravity but are not functional.

MANUFACTURER: Chamberline Manufacturing Corporation

CONTRACT NUMBER: FO8635-82-0001

TEE STATUS: NA

TRAINING ACTIVITY LOCATION, UIC	QUANT REQD	DATE REQD	RFT DATE	STATUS	COURSES SUPPORTED
NAVSCOLEOD/ Eglin AFB, 62640	1			On board	A-431-0011 A-431-0012
EODTEU ONE San Diego, 30202	1			On board	G-431-0001
EODTEU TWO	1			On board	G-431-0001

[2] The container interlock feature, introduced in the CNU-415C/E, will be replicated in the CATM container, CNU-555/E. Retrofit kits have been purchased and retrofit teams have scheduled visits to the training locations to retrofit the containers.

Fort Story, 43505

IV.B.2. CURRICULA MATERIALS AND TRAINING AIDS

TRAINING ACTIVITY: VFA-106
LOCATION, UIC: NAS Cecil Field, 09679
CIN, COURSE TITLE: D-2A-0601, F/A-18 Fleet Replacement Pilot Cat 1
D-2A-0602, F/A-18 Fleet Replacement Pilot Cat 2A
D-2A-0604, F/A-18 Fleet Replacement Pilot Cat 3A
D-2A-0606, F/A-18 Fleet Replacement Pilot Cat 4

TYPE OF MATERIAL OR AID	QUANT REQD	DATE REQD	STATUS
SFTS Online/AMRAAM ICW	1 Set	FY98	On board

TRAINING ACTIVITY: VFA-125
LOCATION, UIC: NAS Lemoore, 09485
CIN, COURSE TITLE: E-2A-0601, F/A-18 Fleet Replacement Pilot Cat 1
E-2A-0602, F/A-18 Fleet Replacement Pilot Cat 2A
E-2A-0604, F/A-18 Fleet Replacement Pilot Cat 3A
E-2A-0606, F/A-18 Fleet Replacement Pilot Cat 4

TYPE OF MATERIAL OR AID	QUANT REQD	DATE REQD	STATUS
SFTS Online/AMRAAM ICW	1 Set	FY98	On board

TRAINING ACTIVITY: VMFAT-101
LOCATION, UIC: MCAS Miramar, 45526
CIN, COURSE TITLE: M13P4B3, F/A-18 Fleet Replacement Pilot Basic and Transition
M13P3V3, F/A-18 Fleet Replacement Pilot Refresher
M13P3W3, F/A-18 Fleet Replacement Pilot Modified Refresher
M13P4C3, F/A-18 WSO Basic and Transition
M13P3R3, F/A-18 WSO Refresher
M13P3S3, F/A-18 WSO Modified Refresher

TYPE OF MATERIAL OR AID	QUANT REQD	DATE REQD	STATUS
SFTS Online/AMRAAM ICW	1 Set	FY98	On board

TRAINING ACTIVITY: SFWS Atlantic
LOCATION, UIC: NAS Cecil Field, 40784
CIN, COURSE TITLE: Strike Fighter Advanced Readiness Program (SFARP)
Strike Fighter Weapons Employment (SFWE)

TYPE OF MATERIAL OR AID	QUANT REQD	DATE REQD	STATUS
SFTS Online/AMRAAM ICW	1 Set	FY98	On board

TRAINING ACTIVITY: SFWS Pacific
LOCATION, UIC: NAS Lemoore, 35185
CIN, COURSE TITLE: SFARP
SFWE

TYPE OF MATERIAL OR AID	QUANT REQD	DATE REQD	STATUS
SFTS Online/AMRAAM ICW	1 Set	FY98	On board

IV.B.2. CURRICULA MATERIALS AND TRAINING AIDS

TRAINING ACTIVITY: NSAWC N7 (Topgun)
LOCATION, UIC: NAS Fallon, 69190
CIN, COURSE TITLE: Strike Fighter Training Program (SFTP)
Strike Fighter Tactics Instructor (SFTI)
Strike Fighter Weapons and Tactics (SFWT) Curricula

TYPE OF MATERIAL OR AID	QUANT REQD	DATE REQD	STATUS
SFTS Online/AMRAAM ICW	1 Set	FY98	On board

TRAINING ACTIVITY: MAWTS 1
LOCATION, UIC: MCAS Yuma, 55167
CIN, COURSE TITLE: Air Combat Maneuvering Instructor (ACMI)
Air Combat Tactics Instructor (ACTI)
Defensive Tactics Instructor (DEFTACI)
Weapons and Tactics Instructor (WTI)

TYPE OF MATERIAL OR AID	QUANT REQD	DATE REQD	STATUS
SFTS Online/AMRAAM ICW	1 Set	FY98	On board

TRAINING ACTIVITY: F/A-18 Squadrons
LOCATION, UIC: **See Below**

CIN, COURSE TITLE: SFTP and Training & Readiness (T&R)

TYPES OF MATERIAL OR AID: SFTS Online/AMRAAM ICW	QUANT REQD	DATE REQD	STATUS
VFA-22, NAS Lemoore, 09561	1 Set	FY98	On board
VFA-25, NAS Lemoore, 09637	1 Set	FY98	On board
VFA-94, NAS Lemoore, 09295	1 Set	FY98	On board
VFA-97, NAS Lemoore, 63923	1 Set	FY98	On board
VFA-113, NAS Lemoore, 09092	1 Set	FY98	On board
VFA-115, NAS Lemoore, 09604	1 Set	FY98	On board
VFA-137, NAS Lemoore, 55142	1 Set	FY98	On board
VFA-146, NAS Lemoore, 09063	1 Set	FY98	On board
VFA-147, NAS Lemoore, 63925	1 Set	FY98	On board
VFA-151, NAS Lemoore, 09558	1 Set	FY98	On board
VFA-27, NAS Yokosuka, 65185	1 Set	FY98	On board
VFA-154, NAS Yokosuka, 09678	1 Set	FY98	On board
VFA-192, NAS Yokosuka, 55179	1 Set	FY98	On board
VFA-195, NAS Yokosuka, 09706	1 Set	FY98	On board
VFA-127, NAS Fallon, 08956	1 Set	FY98	On board
VFC-13 (TAR), NAS Fallon, 52995	1 Set	FY98	On board
VFA-15, NAS Oceana, 09015	1 Set	FY98	On board
VFA-34, NAS Oceana, 09070	1 Set	FY98	On board
VFA-37, NAS Oceana, 09478	1 Set	FY98	On board
VFA-81, NAS Oceana, 09221	1 Set	FY98	On board
VFA-82, NAS Oceana, 09122	1 Set	FY98	On board

IV.B.2. CURRICULA MATERIALS AND TRAINING AIDS

TYPES OF MATERIAL OR AID: SFTS Online/AMRAAM ICW	**QUANT REQD**	**DATE REQD**	**STATUS**
VFA-83, NAS Oceana, 09223	1 Set	FY98	On board
VFA-86, MCAS Beaufort, 09943	1 Set	FY98	On board
VFA-87, MCAS Beaufort, 63922	1 Set	FY98	On board
VFA-105, NAS Oceana, 65183	1 Set	FY98	On board
VFA-131, NAS Oceana, 63934	1 Set	FY98	On board
VFA-136, NAS Oceana, 55141	1 Set	FY98	On board
VFC-12 (TAR), NAS Oceana, 52994	1 Set	FY98	On board
VFA-203 (TAR), NAS Atlanta, 09030	1 Set	FY98	On board
VFA-204 (TAR), NAS JRB New Orleans, 09032	1 Set	FY98	On board
VX-23, NAS Patuxent River, 39783	1 Set	FY98	On board
VX-9, NAWCWD China Lake, 55646	1 Set	FY98	On board
VX-9 Det, NAWCWD Point Mugu, 09830	1 Set	FY98	On board
VX-30 NACWD China Lake, 39788	1 Set	FY02	On-Board

TRAINING ACTIVITY: F/A-18 Squadrons
LOCATION, UIC: **See Below**

CIN, COURSE TITLE: Squadron Training (T&R)

TYPES OF MATERIAL OR AID: SFTS Online/AMRAAM ICW	**QUANT REQD**	**DATE REQD**	**STATUS**
VMFA-115, MCAS Beaufort, 09234	1 Set	FY98	On board
VMFA-122, MCAS Beaufort, 09407	1 Set	FY98	On board
VMFA-251, MCAS Beaufort, 09241	1 Set	FY98	On board
VMFA-312, MCAS Beaufort, 09253	1 Set	FY98	On board
VMFAAW-224, MCAS Beaufort, 01224	1 Set	FY98	On board
VMFAAW-332, MCAS Beaufort, 09501	1 Set	FY98	On board
VMFAAW-533, MCAS Beaufort, 09193	1 Set	FY98	On board
VMFA-212, MCAS Miramar, 09434	1 Set	FY98	On board
VMFA-232, MCAS Miramar, 09242	1 Set	FY98	On board
VMFA-235, , MCAS Miramar, 09237	1 Set	FY98	On board
VMFA-314, MCAS Miramar, 09230	1 Set	FY98	On board
VMFA-323, MCAS Miramar, 09235	1 Set	FY98	On board
VMFAAW-121, MCAS Miramar,	1 Set	FY98	On board
VMFAAW-225, MCAS Miramar, 09232	1 Set	FY98	On board
VMFA-112 (AR), 08954	1 Set	FY98	On board
VMFA-134 (AR), 09365	1 Set	FY98	On board
VMFA-142 (AR), 67243	1 Set	FY98	On board
VMFA-321 (AR), 67235	1 Set	FY98	On board

IV.B.2. CURRICULA MATERIALS AND TRAINING AIDS

TRAINING ACTIVITY: NATTC AO "A" School
LOCATION, UIC: NAS Pensacola, 63082
CIN, COURSE TITLE: C-646-2011, Aviation Ordnanceman Common Core Class A1
C-646-2012, Aviation Ordnanceman Navy Difference Training Strand Class A1

TYPE OF MATERIAL OR AID	QUANT REQD	DATE REQD	STATUS
AMRAAM Loading & Handling ICW	1 Set		On board

TRAINING ACTIVITY: SFWS Atlantic
LOCATION, UIC: NAS Oceana, 47084
CIN, COURSE TITLE: D-646-0640, F/A-18 Conventional Weapons Loading
D-646-0647, F/A-18 Conventional Release System Test

TYPE OF MATERIAL OR AID	QUANT REQD	DATE REQD	STATUS
AMRAAM Loading & Handling ICW	1 Set		On board

TRAINING ACTIVITY: SFWS Pacific
LOCATION, UIC: NAS Lemoore, 35185
CIN, COURSE TITLE: E-646-0640, F/A-18 Conventional Weapons Loading
E-646-0647, F/A-18 Conventional Release System Test

TYPE OF MATERIAL OR AID	QUANT REQD	DATE REQD	STATUS
AMRAAM Loading & Handling ICW	1 Set		On board

TRAINING ACTIVITY: MTU-4030 NAMTRAGRUDET
LOCATION, UIC: NS Mayport, 66069
CIN, COURSE TITLE: C-122-3111, Air Launched Guided Missiles Intermediate Maintenance
C-646-3118, Strike Armament Intermediate Maintenance Repair

TYPE OF MATERIAL OR AID	QUANT REQD	DATE REQD	STATUS
AMRAAM Loading & Handling ICW	1 Set		On board

TRAINING ACTIVITY: MTU-4032 NAMTRAU
LOCATION, UIC: NAS Norfolk, 66046
CIN, COURSE TITLE: C-122-3111, Air Launched Guided Missiles Intermediate Maintenance
C-646-3118, Strike Armament Intermediate Maintenance Repair

TYPE OF MATERIAL OR AID	QUANT REQD	DATE REQD	STATUS
AMRAAM Loading & Handling ICW	1 Set		On board

TRAINING ACTIVITY: MTU-4033 NAMTRAU
LOCATION, UIC: NAS North Island, 66065
CIN, COURSE TITLE: C-122-3111, Air Launched Guided Missiles Intermediate Maintenance
C-646-3118, Strike Armament Intermediate Maintenance Repair

TYPE OF MATERIAL OR AID	QUANT REQD	DATE REQD	STATUS
AMRAAM Loading & Handling ICW	1 Set		On board

IV.B.2. CURRICULA MATERIALS AND TRAINING AIDS

TRAINING ACTIVITY: MTU-4034 NAMTRAMARU
LOCATION, UIC: MCAS Cherry Point, 66047
CIN, COURSE TITLE: C-646-3105, Aviation Ordnance Intermediate Maintenance Technician

TYPE OF MATERIAL OR AID	QUANT REQD	DATE REQD	STATUS
AMRAAM Loading & Handling ICW	1 Set		On board

TRAINING ACTIVITY: MTU-4035 NAMTRAU
LOCATION, UIC: NAS Whidbey Island, 66058
CIN, COURSE TITLE: C-122-3111, Air Launched Guided Missiles Intermediate Maintenance

TYPE OF MATERIAL OR AID	QUANT REQD	DATE REQD	STATUS
Source Data for AIM-120C	1 Set	FY99	Available

TRAINING ACTIVITY: NAVSCOLEOD
LOCATION, UIC: Eglin AFB, 62640
CIN, COURSE TITLE: A-431-0011, EOD Phase II (Navy)
A-431-0012, EOD Phase II

TYPE OF MATERIAL OR AID	QUANT REQD	DATE REQD	STATUS
AMRAAM Loading & Handling ICW	1 Set		On board

TRAINING ACTIVITY: EODTEU ONE
LOCATION, UIC: San Diego, 30202
CIN, COURSE TITLE: G-431-0001, EOD Pre-deployment Team Training

TYPE OF MATERIAL OR AID	QUANT REQD	DATE REQD	STATUS
AMRAAM Loading & Handling ICW	1 Set		On board

TRAINING ACTIVITY: EODTEU TWO
LOCATION, UIC: Fort Story, 43505
CIN, COURSE TITLE: G-431-0001, EOD Pre-deployment Team Training

TYPE OF MATERIAL OR AID	QUANT REQD	DATE REQD	STATUS
AMRAAM Loading & Handling ICW	1 Set		On board

TRAINING ACTIVITY: F/A-18 Squadrons/Weapons Department
LOCATION, UIC: **See Below**

CIN, COURSE TITLE: Inter-Deployment Training Cycle(IDTC)

TYPES OF MATERIAL OR AID: AMRAAM Loading & Handling ICW	QUANT REQD	DATE REQD	STATUS
Carrier Air Wing 2, 09742	1 Set	FY98	On board
Carrier Air Wing 5, 09733	1 Set	FY98	On board
Carrier Air Wing 9, 09738	1 Set	FY98	On board

IV.B.2. CURRICULA MATERIALS AND TRAINING AIDS

TRAINING ACTIVITY: F/A-18 Squadrons/Weapons Department
LOCATION, UIC: **See Below**

CIN, COURSE TITLE: Inter-Deployment Training Cycle(IDTC)

TYPES OF MATERIAL OR AID: AMRAAM Loading & Handling ICW	**QUANT REQD**	**DATE REQD**	**STATUS**
Carrier Air Wing 11, 09734	1 Set	FY98	On board
Carrier Air Wing 14, 09261	1 Set	FY98	On board
COMSTRKFIGHTWINGPAC, 09520	1 Set	FY98	On board
VFA-22, NAS Lemoore, 09561	1 Set	FY98	On board
VFA-25, NAS Lemoore, 09637	1 Set	FY98	On board
VFA-94, NAS Lemoore, 09295	1 Set	FY98	On board
VFA-97, NAS Lemoore, 63923	1 Set	FY98	On board
VFA-113, NAS Lemoore, 09092	1 Set	FY98	On board
VFA-115, NAS Lemoore, 09604	1 Set	FY98	On board
VFA-122, NAS Lemoore, TBD	1 Set	FY98	On board
VFA-125, NAS Lemoore, 09485	1 Set	FY98	On board
VFA-137, NAS Lemoore, 55142	1 Set	FY98	On board
VFA-146, NAS Lemoore, 09063	1 Set	FY98	On board
VFA-147, NAS Lemoore, 63925	1 Set	FY98	On board
VFA-151, NAS Lemoore, 09558	1 Set	FY98	On board
VFA-27, NAF Atsugi, 65185	1 Set	FY98	On board
VFA-154, NAF Atsugi, 09678	1 Set	FY98	On board
VFA-192, NAF Atsugi, 55179	1 Set	FY98	On board
VFA-195, NAF Atsugi, 09706	1 Set	FY98	On board
VFA-127, NAS Fallon, 08956	1 Set	FY98	On board
VFC-13 (TAR), NAS Fallon, 52995	1 Set	FY98	On board
Carrier Air Wing 1, 09732	1 Set	FY98	On board
Carrier Air Wing 3, 09731	1 Set	FY98	On board
Carrier Air Wing 7, 09736	1 Set	FY98	On board
Carrier Air Wing 8, 09748	1 Set	FY98	On board
Carrier Air Wing 17, 09745	1 Set	FY98	On board
COMSTRKFIGHTWINGLANT, 09103	1 Set	FY98	On board
VFA-15, NAS Oceana, 09015	1 Set	FY98	On board
VFA-34, NAS Oceana, 09070	1 Set	FY98	On board
VFA-37, NAS Oceana, 09478	1 Set	FY98	On board
VFA-81, NAS Oceana, 09221	1 Set	FY98	On board
VFA-83, NAS Oceana, 09223	1 Set	FY98	On board
VFA-87, NAS Oceana, 63922	1 Set	FY98	On board
VFA-105, NAS Oceana, 65183	1 Set	FY98	On board
VFA-106, NAS Oceana, 09679	1 Set	FY98	On board
VFA-131, NAS Oceana, 63934	1 Set	FY98	On board

IV.B.2. CURRICULA MATERIALS AND TRAINING AIDS

TRAINING ACTIVITY: F/A-18 Squadrons/Weapons Department
LOCATION, UIC: **See Below**

CIN, COURSE TITLE: Inter-Deployment Training Cycle(IDTC)

TYPES OF MATERIAL OR AID: AMRAAM Loading & Handling ICW	**QUANT REQD**	**DATE REQD**	**STATUS**
VFA-136, NAS Oceana, 55141	1 Set	FY98	On board
VFA-82, MCAS Beaufort, 09122	1 Set	FY98	On board
VFA-86, MCAS Beaufort, 09943	1 Set	FY98	On board
VFC-12 (TAR), NAS Oceana, 52994	1 Set	FY98	On board
Carrier Air Wing Reserve 20, 09393	1 Set	FY98	On board
VFA-201 (TAR), JRB Fort Worth, 09309	1 Set	FY98	On board
VFA-203 (TAR), JRB Atlanta, 09030	1 Set	FY98	On board
VFA-204 (TAR), JRB New Orleans, 09032	1 Set	FY98	On board
VX-1, NAS Patuxent River, 55600	1 Set	FY98	On board
VX-9, NAWCWD China Lake, 55646	1 Set	FY98	On board
VX-9 Det, NAWS Point Mugu, 09830	1 Set	FY98	On board
2nd MAW Cherry Point, 00201	1 Set	FY98	On board
VMFA-115, MCAS Beaufort, 09234	1 Set	FY98	On board
VMFA-122, MCAS Beaufort, 09407	1 Set	FY98	On board
VMFA-251, MCAS Beaufort, 09241	1 Set	FY98	On board
VMFA-312, MCAS Beaufort, 09253	1 Set	FY98	On board
VMFA(AW)-224, MCAS Beaufort, 01224	1 Set	FY98	On board
VMFA(AW)-332, MCAS Beaufort, 09501	1 Set	FY98	On board
VMFA(AW)-533, MCAS Beaufort, 09193	1 Set	FY98	On board
3rd MAW Miramar, 00300	1 Set	FY98	On board
VMFA-212, MCAS Miramar, 09434	1 Set	FY98	On board
VMFA-232, MCAS Miramar, 09242	1 Set	FY98	On board
VMFA-235, , MCAS Miramar, 09237	1 Set	FY98	On board
VMFA-314, MCAS Miramar, 09230	1 Set	FY98	On board
VMFA-323, MCAS Miramar, 09235	1 Set	FY98	On board
VMFA(AW)-121, MCAS Miramar, 09257	1 Set	FY98	On board
VMFA(AW)-225, MCAS Miramar, 09232	1 Set	FY98	On board
VMFA(AW)-242, MCAS Miramar, 09668	1 Set	FY98	On board
VMFAT-101, MCAS Miramar, 09965	1 Set	FY98	On board
4th MAW New Orleans, 00400	1 Set	FY98	On board
VMFA-112 (AR), JRB Fort Worth, 08954	1 Set	FY98	On board
VMFA-134 (AR), MCAS Miramar, 09365	1 Set	FY98	On board
VMFA-142 (AR), JRB Atlanta, 67243	1 Set	FY98	On board
VMFA-321 (AR), NAF Washington, 67235	1 Set	FY98	On board
COMNAVAIRLANT, NAS Norfolk, 57012	1 Set	FY98	On board

IV.B.2. CURRICULA MATERIALS AND TRAINING AIDS

TRAINING ACTIVITY: F/A-18 Squadrons/Weapons Department
LOCATION, UIC: **See Below**

CIN, COURSE TITLE: Inter-Deployment Training Cycle(IDTC)

TYPES OF MATERIAL OR AID: AMRAAM Loading & Handling ICW	**QUANT REQD**	**DATE REQD**	**STATUS**
COMNAVAIRPAC, NAS North Island, 57025	1 Set	FY98	On board
NAS Fallon, 60495	1 Set	FY98	On board
NAS Key West, 00213	1 Set	FY98	On board
NAS Lemoore, 63042	1 Set	FY98	On board
NAS North Island, 00246	1 Set	FY98	On board
NAS Oceana, 60191	1 Set	FY98	On board
NAS Patuxent River, 0428A	1 Set	FY98	On board
NAS Point Mugu, 0429A	1 Set	FY98	On board
NS Roosevelt Roads, 00389	1 Set	FY98	On board
NAS Whidbey Island, 00620	1 Set	FY98	On board
NAF Atsugi, 62507	1 Set	FY98	On board
NAF El Centro, 60042	1 Set	FY98	On board
NAWS China Lake, 68937	1 Set	FY98	On board
NAWS Point Mugu, 0429A	1 Set	FY98	On board
NAWMU-1, 52821	1 Set	FY98	On board
NAVSUPPFAC Diego Garcia, 68539	1 Set	FY98	On board
NAWCAD Patuxent River, 00421	1 Set	FY98	On board
NAWCWD Point Mugu, 63126	1 Set	FY98	On board
NWTS, China Lake, 39787	1 Set	FY98	On board
NWTS, Point Mug, 39788	1 Set	FY98	On board
NWS Seal Beach, 60701	1 Set	FY98	On board
NWS Yorktown, 69212	1 Set	FY98	On board
JRB/NAS Atlanta, 00196	1 Set	FY98	On board
JRB/NAS Fort Worth, 83447	1 Set	FY98	On board
JRB/NAS New Orleans, 00206	1 Set	FY98	On board
JRB Willow Grove, 00158	1 Set	FY98	On board
NAF Washington (Andrews AFB), 00166	1 Set	FY98	On board
FASOTRAGRULANT (MOTT), NAS Norfolk, 09810	1 Set	FY98	On board
FASOTRAGRUPAC DET Fallon (MOTT), NAS Fallon, 39937	1 Set	FY98	On board
FASOTRAGRUPAC DET Lemoore, NAS Lemoore, 0347A	1 Set	FY98	On board
CV-63 USS Kitty Hawk, 03363	1 Set	FY98	On board
CV-64 USS Constellation, 03364	1 Set	FY98	On board
CVN-65 USS Enterprise, 03365	1 Set	FY98	On board
CV-67 USS Kennedy, 03367	1 Set	FY98	On board
CVN-68 USS Nimitz, 03368	1 Set	FY98	On board
CVN-69 USS Eisenhower, 03369	1 Set	FY98	On board

IV.B.2. CURRICULA MATERIALS AND TRAINING AIDS

TRAINING ACTIVITY: F/A-18 Squadrons/Weapons Department
LOCATION, UIC: **See Below**

CIN, COURSE TITLE: Inter-Deployment Training Cycle(IDTC)

TYPES OF MATERIAL OR AID: AMRAAM Loading & Handling ICW	**QUANT REQD**	**DATE REQD**	**STATUS**
CVN-70 USS Vinson, 20993	1 Set	FY98	On board
CVN-71 USS Roosevelt, 21247	1 Set	FY98	On board
CVN-72 USS Lincoln, 21297	1 Set	FY98	On board
CVN-73 USS Washington, 21412	1 Set	FY98	On board
CVN-74 USS Stennis, 21847	1 Set	FY98	On board
CVN-75 USS Truman, 21853	1 Set	FY98	On board
CVN-76 USS Reagan, BDT	1 Set	FY04	Available
TAE-26 USNS Kilauea, 42842	1 Set	FY98	On board
TAE-27 USNS Butte, 42843	1 Set	FY98	On board
TAE-32 USNS Flint, 39536	1 Set	FY98	On board
TAE-33 USNS Shasta, 43055	1 Set	FY98	On board
TAE-34 USNS Mount Baker, 39537	1 Set	FY98	On board
TAE-35 USNS Kiska, 39538	1 Set	FY98	On board
COMMARFORLANT, NOB Norfolk, 67025	1 Set	FY98	On board
COMMARFORPAC, Camp Smith Hawaii, 67026	1 Set	FY98	On board
COMMARFORRES, JRB New Orleans, 67861	1 Set	FY98	On board
MCAS Beaufort, 60169	1 Set	FY98	On board
MCAS Miramar, 67865	1 Set	FY98	On board
MCAS Yuma, 62974	1 Set	FY98	On board
MAD China Lake, 67852	1 Set	FY98	On board
MAD Patuxent River, 67356	1 Set	FY98	On board
MAD Point Mugu, 67414	1 Set	FY98	On board
MALS-11 Miramar, 09111	1 Set	FY98	On board
MALS-12 Iwakuni, 09377	1 Set	FY98	On board
MALS-13 Yuma, 09041	1 Set	FY98	On board
MALS-31 Beaufort, 09384	1 Set	FY98	On board
MALS-41 Fort Worth, 67239	1 Set	FY98	On board
MALS-42 Marietta, 67236	1 Set	FY98	On board
MALS-46 Miramar, 67244	1 Set	FY98	On board
MASD Andrews, 04801	1 Set	FY98	On board

IV.B.3. TECHNICAL MANUALS

TRAINING ACTIVITY: VFA-106
LOCATION, UIC: NAS Cecil Field, 09679
CIN, COURSE TITLE: D-2A-0601, F/A-18 Fleet Replacement Pilot Cat 1
D-2A-0602, F/A-18 Fleet Replacement Pilot Cat 2A
D-2A-0604, F/A-18 Fleet Replacement Pilot Cat 3A
D-2A-0606, F/A-18 Fleet Replacement Pilot Cat 4

TECHNICAL MANUAL TITLE, NUMBER	MEDIUM	QUANT REQD	DATE REQD	STATUS
NATOPS Flight Manual Navy Model F/A-18C/D, A1-F18AC-NFM-000	Hard copy	6		On board
NATOPS Pocket Checklist, A1-F18AC-NFM-500	Hard copy	6		On board
Tactical Manual, A1-F18AE-TAC-000	Hard copy	6		On board
Tactical Manual Pocket Guide, A1-F18AC-TAC-300	Hard copy	6		On board

TRAINING ACTIVITY: VFA-125
LOCATION, UIC: NAS Lemoore, 09485
CIN, COURSE TITLE: E-2A-0601, F/A-18 Fleet Replacement Pilot Cat 1
E-2A-0602, F/A-18 Fleet Replacement Pilot Cat 2A
E-2A-0604, F/A-18 Fleet Replacement Pilot Cat 3A
E-2A-0606, F/A-18 Fleet Replacement Pilot Cat 4

TECHNICAL MANUAL TITLE, NUMBER	MEDIUM	QUANT REQD	DATE REQD	STATUS
NATOPS Flight Manual Navy Model F/A-18C/D, A1-F18AC-NFM-000	Hard copy	6		On board
NATOPS Pocket Checklist, A1-F18AC-NFM-500	Hard copy	6		On board
Tactical Manual, A1-F18AE-TAC-000	Hard copy	6		On board
Tactical Manual Pocket Guide, A1-F18AC-TAC-300	Hard copy	6		On board

TRAINING ACTIVITY: SFWS Atlantic
LOCATION, UIC: NAS Cecil Field, 40784
CIN, COURSE TITLE: SFARP
SFWE

TECHNICAL MANUAL TITLE, NUMBER	MEDIUM	QUANT REQD	DATE REQD	STATUS
NATOPS Flight Manual Navy Model F/A-18C/D, A1-F18AC-NFM-000	Hard copy	6		On board
NATOPS Pocket Checklist, A1-F18AC-NFM-500	Hard copy	6		On board
Tactical Manual, A1-F18AE-TAC-000	Hard copy	6		On board
Tactical Manual Pocket Guide, A1-F18AC-TAC-300	Hard copy	6		On board

IV.B.3. TECHNICAL MANUALS

TRAINING ACTIVITY: SFWS Pacific
LOCATION, UIC: NAS Lemoore, 35185
CIN, COURSE TITLE: SFARP
SFWE

TECHNICAL MANUAL TITLE, NUMBER	MEDIUM	QUANT REQD	DATE REQD	STATUS
NATOPS Flight Manual Navy Model F/A-18C/D, A1-F18AC-NFM-000	Hard copy	6		On board
NATOPS Pocket Checklist, A1-F18AC-NFM-500	Hard copy	6		On board
Tactical Manual, A1-F18AE-TAC-000	Hard copy	6		On board
Tactical Manual Pocket Guide, A1-F18AC-TAC-300	Hard copy	6		On board

TRAINING ACTIVITY: VMFAT-101
LOCATION, UIC: MCAS Miramar, 45526
CIN, COURSE TITLE: M13P4B3, F/A-18 Fleet Replacement Pilot Basic and Transition
M13P3V3, F/A-18 Fleet Replacement Pilot Refresher
M13P3W3, F/A-18 Fleet Replacement Pilot Modified Refresher
M13P4C3, F/A-18 WSO Basic and Transition
M13P3R3, F/A-18 WSO Refresher
M13P3S3, F/A-18 WSO Modified Refresher

TECHNICAL MANUAL TITLE, NUMBER	MEDIUM	QUANT REQD	DATE REQD	STATUS
NATOPS Flight Manual Navy Model F/A-18C/D, A1-F18AC-NFM-000	Hard copy	6		On board
NATOPS Pocket Checklist, A1-F18AC-NFM-500	Hard copy	6		On board
Tactical Manual, A1-F18AE-TAC-000	Hard copy	6		On board
Tactical Manual Pocket Guide, A1-F18AC-TAC-300	Hard copy	6		On board

IV.B.3. TECHNICAL MANUALS

TRAINING ACTIVITY: MAWTS 1
LOCATION, UIC: MCAS Yuma, 55167
CIN, COURSE TITLE: Air Combat Maneuvering Instructor (ACMI)
Air Combat Tactics Instructor (ACTI)
Defensive Tactics Instructor (DEFTACI)
Weapons and Tactics Instructor (WTI)

TECHNICAL MANUAL TITLE, NUMBER	MEDIUM	QUANT REQD	DATE REQD	STATUS
NATOPS Flight Manual Navy Model F/A-18C/D, A1-F18AC-NFM-000	Hard copy	6		On board
NATOPS Pocket Checklist, A1-F18AC-NFM-500	Hard copy	6		On board
Tactical Manual, A1-F18AE-TAC-000	Hard copy	6		On board
Tactical Manual Pocket Guide, A1-F18AC-TAC-300	Hard copy	6		On board

TRAINING ACTIVITY: AO "A1" School
LOCATION, UIC: NATTC , NAS Pensacola, 30459
CIN, COURSE TITLE: C-646-2011, Aviation Ordnanceman Common Core Class A1
C-646-2012, Aviation Ordnanceman Navy Difference Training Strand Class A1

TECHNICAL MANUAL TITLE, NUMBER	MEDIUM	QUANT REQD	DATE REQD	STATUS
Airborne Weapons/Stores Loading Manual, F/A-18A/B/C/D Aircraft A1-F18AE-LWS-000	Hard copy	8		On board
Release & Control (Missiles), Air to Air A1-F18AE-LWS-210	Hard copy	8		On board
Checklist - AIM-120 (AMRAAM) A1-F18AE-LWS-510	Hard copy	8		On board
Fleet Intermediate Maintenance Instructions with IPB, AIM-120 and CATM-120 NA 01-AIM-120-2	Hard copy	8		On board
Airborne Weapons Assembly Manual, Vol. I, AIM-120 (AMRAAM) NA 11-140-6.1-5	Hard copy	8		On board
Airborne Weapons Assembly Manual, Vol. III, NA 11-140-6.3	Hard copy	8		On board
AIM-7, AIM-9, AIM-54, and AIM-120 Guided Missile Work Unit Code Manual NA A1-AIM AA-WUC-800	Hard copy	8		On board
LAU-127A/A Aircraft Guided Missile Launcher, Intermediate Maintenance with IPB NA 11-75A-514	Hard copy	8		On board

IV.B.3. TECHNICAL MANUALS

TRAINING ACTIVITY: SFWS Atlantic
LOCATION, UIC: NAS Oceana, 47084
CIN, COURSE TITLE: D-646-0640, F/A-18 Conventional Weapons Loading
D-646-0647, F/A-18 Conventional Release System Test

TECHNICAL MANUAL TITLE, NUMBER	MEDIUM	QUANT REQD	DATE REQD	STATUS
Airborne Weapons/Stores Loading Manual, F/A-18A/B/C/D Aircraft A1-F18AE-LWS-000	Hard copy	8		On board
Tactical Manual Pocket Guide, A1-F18AC-TAC-300	Hard copy	8		On board
Release & Control (Missiles), Air to Air A1-F18AE-LWS-210	Hard copy	8		On board
Checklist - AIM-120 (AMRAAM) A1-F18AE-LWS-510	Hard copy	8		On board
AIM-7, AIM-9, AIM-54, and AIM-120 Guided Missile Work Unit Code Manual NA A1-AIM AA-WUC-800	Hard copy	8		On board
Approved Handling Equipment for Weapons and Explosives NA 19-100-1.2 (OP-2173)	Hard copy	8		On board
Airborne Weapons Handling Equipment NA 19-100-2 (Shipboard)	Hard copy	8		On board
Armament Weapons Support Equipment NA 11-140-25	Hard copy	8		On board
Organizational and Intermediate Manual with IPB, LAU-127A/A NA 11-75A-51A	Hard copy	8		On board

IV.B.3. TECHNICAL MANUALS

TRAINING ACTIVITY: SFWS Pacific
LOCATION, UIC: NAS Lemoore, 35185
CIN, COURSE TITLE: E-646-0640, F/A-18 Conventional Weapons Loading
E-646-0647, F/A-18 Conventional Release System Test

TECHNICAL MANUAL TITLE, NUMBER	MEDIUM	QUANT REQD	DATE REQD	STATUS
Airborne Weapons/Stores Loading Manual, F/A-18A/B/C/D Aircraft A1-F18AE-LWS-000	Hard copy	8		On board
Tactical Manual Pocket Guide, A1-F18AC-TAC-300	Hard copy	8		On board
Release & Control (Missiles), Air to Air A1-F18AE-LWS-210	Hard copy	8		On board
Checklist - AIM-120 (AMRAAM) A1-F18AE-LWS-510	Hard copy	8		On board
AIM-7, AIM-9, AIM-54, and AIM-120 Guided Missile Work Unit Code Manual NA A1-AIM AA-WUC-800	Hard copy	8		On board
Approved Handling Equipment for Weapons and Explosives NA 19-100-1.2 (OP-2173)	Hard copy	8		On board
Airborne Weapons Handling Equipment NA 19-100-2 (Shipboard)	Hard copy	8		On board
Armament Weapons Support Equipment NA 11-140-25	Hard copy	8		On board
Organizational and Intermediate Manual with IPB, LAU-127A/A NA 11-75A-51A	Hard copy	8		On board

IV.B.3. TECHNICAL MANUALS

TRAINING ACTIVITY: MTU-4030 NAMTRAGRUDET
LOCATION, UIC: NS Mayport, 66069
CIN, COURSE TITLE: C-122-3111A, Air Launched Guided Missiles Intermediate Maintenance
C-646-3118, Strike Armament Intermediate Maintenance Repair

TECHNICAL MANUAL TITLE, NUMBER	MEDIUM	QUANT REQD	DATE REQD	STATUS
Fleet Intermediate Maintenance Instructions with IPB, AIM-120 and CATM-120 NA 01-AIM-120-2	Hard copy	13		On board
Maintenance Instructions with IPB, AIM-120A, AIM-120B, AIM-120C, CATM-120A, CATM-120B, and CATM-120C NA 01-AIM-120-2-1	Hard copy	13		On board
Airborne Weapons Assembly Manual, Vol. I, AIM-120 (AMRAAM) NA 11-140-6.1-5	Hard copy	13		On board
Airborne Weapons Assembly Manual, Vol. III, NA 11-140-6.3	Hard copy	13		On board
AIM-7, AIM-9, AIM-54, and AIM-120 Guided Missile Work Unit Code Manual NA A1-AIM AA-WUC-800	Hard copy	13		On board
AMRAAM AIM-120 Ship Weapons Installation Manual NA 11-120-64	Hard copy	13		On board
Armament Weapons Support Equipment Configuration Manual NA 11-140-25	Hard copy	13		On board
Approved Handling Equipment for Weapons and Explosives NA 19-100-1.2 (OP-2173)	Hard copy	13		On board
Airborne Weapons Handling Equipment NA 19-100-2 (Shipboard)	Hard copy	13		On board
Intermediate Maintenance with IPB, Armament Weapons Support Equipment NA 19-100-3	Hard copy	13		On board
Intermediate and Depot maintenance Manual with IPB, AMRAAM Containers NA 11-75-65	Hard copy	13		On board
Intermediate and Depot maintenance Manual with IPB, AMRAAM Containers NA 11-75-65	Hard copy	13		On board

IV.B.3. TECHNICAL MANUALS

TRAINING ACTIVITY: MTU-4032 NAMTRAU
LOCATION, UIC: NAS Norfolk, 66046
CIN, COURSE TITLE: C-122-3111, Air Launched Guided Missiles Intermediate Maintenance
C-646-3118, Strike Armament Intermediate Maintenance Repair

TECHNICAL MANUAL TITLE, NUMBER	MEDIUM	QUANT REQD	DATE REQD	STATUS
Fleet Intermediate Maintenance Instructions with IPB, AIM-120 and CATM-120 NA 01-AIM-120-2	Hard copy	13		On board
Maintenance Instructions with IPB, AIM-120A, AIM-120B, AIM-120C, CATM-120A, CATM-120B, and CATM-120C NA 01-AIM-120-2-1	Hard copy	13		On board
Airborne Weapons Assembly Manual, Vol. I, AIM-120 (AMRAAM) NA 11-140-6.1-5	Hard copy	13		On board
Airborne Weapons Assembly Manual, Vol. III, NA 11-140-6.3	Hard copy	13		On board
AIM-7, AIM-9, AIM-54, and AIM-120 Guided Missile Work Unit Code Manual NA A1-AIM AA-WUC-800	Hard copy	13		On board
AMRAAM AIM-120 Ship Weapons Installation Manual NA 11-120-64	Hard copy	13		On board
Armament Weapons Support Equipment Configuration Manual NA 11-140-25	Hard copy	13		On board
Approved Handling Equipment for Weapons and Explosives NA 19-100-1.2 (OP-2173)	Hard copy	13		On board
Airborne Weapons Handling Equipment NA 19-100-2 (Shipboard)	Hard copy	13		On board
Intermediate Maintenance with IPB, Armament Weapons Support Equipment NA 19-100-3	Hard copy	13		On board
Intermediate and Depot maintenance Manual with IPB, AMRAAM Containers NA 11-75-65	Hard copy	13		On board
Organizational and Intermediate Manual with IPB, LAU-127A/A NA 11-75A-51A	Hard copy	13		On board
LAU-127A/A Aircraft Guided Missile Launcher, Intermediate Maintenance with IPB NA 11-75A-514	Hard copy	13		On board

IV.B.3. TECHNICAL MANUALS

TRAINING ACTIVITY: MTU-4033 NAMTRAU
LOCATION, UIC: NAS North Island, 66065
CIN, COURSE TITLE: C-122-3111, Air Launched Guided Missiles Intermediate Maintenance
C-646-3118, Strike Armament Intermediate Maintenance Repair

TECHNICAL MANUAL TITLE, NUMBER	MEDIUM	QUANT REQD	DATE REQD	STATUS
Fleet Intermediate Maintenance Instructions with IPB, AIM-120 and CATM-120 NA 01-AIM-120-2	Hard copy	13		On board
Maintenance Instructions with IPB, AIM-120A, AIM-120B, AIM-120C, CATM-120A, CATM-120B, and CATM-120C NA 01-AIM-120-2-1	Hard copy	13		On board
Airborne Weapons Assembly Manual, Vol. I, AIM-120 (AMRAAM) NA 11-140-6.1-5	Hard copy	13		On board
Airborne Weapons Assembly Manual, Vol. III, NA 11-140-6.3	Hard copy	13		On board
AIM-7, AIM-9, AIM-54, and AIM-120 Guided Missile Work Unit Code Manual NA A1-AIM AA-WUC-800	Hard copy	13		On board
AMRAAM AIM-120 Ship Weapons Installation Manual NA 11-120-64	Hard copy	13		On board
Armament Weapons Support Equipment Configuration Manual NA 11-140-25	Hard copy	13		On board
Approved Handling Equipment for Weapons and Explosives NA 19-100-1.2 (OP-2173)	Hard copy	13		On board
Airborne Weapons Handling Equipment NA 19-100-2 (Shipboard)	Hard copy	13		On board
Intermediate Maintenance with IPB, Armament Weapons Support Equipment NA 19-100-3	Hard copy	13		On board
Intermediate and Depot maintenance Manual with IPB, AMRAAM Containers NA 11-75-65	Hard copy	13		On board
Organizational and Intermediate Manual with IPB, LAU-127A/A NA 11-75A-51A	Hard copy	13		On board
LAU-127A/A Aircraft Guided Missile Launcher, Intermediate Maintenance with IPB NA 11-75A-5141	Hard copy	13		On board

IV.B.3. TECHNICAL MANUALS

TRAINING ACTIVITY: MTU-4034 NAMTRAMARU
LOCATION, UIC: MCAS Cherry Point, 66047
CIN, COURSE TITLE: C-646-3105, Aviation Ordnance Intermediate Maintenance Technician

TECHNICAL MANUAL TITLE, NUMBER	MEDIUM	QUANT REQD	DATE REQD	STATUS
Fleet Intermediate Maintenance Instructions with IPB, AIM-120 and CATM-120 NA 01-AIM-120-2	Hard copy	13		On board
Maintenance Instructions with IPB, AIM-120A, AIM-120B, AIM-120C, CATM-120A, CATM-120B, and CATM-120C NA 01-AIM-120-2-1	Hard copy	13		On board
Airborne Weapons Assembly Manual, Vol. I, AIM-120 (AMRAAM) NA 11-140-6.1-5	Hard copy	13		On board
Airborne Weapons Assembly Manual, Vol. III, NA 11-140-6.3	Hard copy	13		On board
AIM-7, AIM-9, AIM-54, and AIM-120 Guided Missile Work Unit Code Manual NA A1-AIM AA-WUC-800	Hard copy	13		On board
AMRAAM AIM-120 Ship Weapons Installation Manual NA 11-120-64	Hard copy	13		On board
Armament Weapons Support Equipment Configuration Manual NA 11-140-25	Hard copy	13		On board
Approved Handling Equipment for Weapons and Explosives NA 19-100-1.2 (OP-2173)	Hard copy	13		On board
Airborne Weapons Handling Equipment NA 19-100-2 (Shipboard)	Hard copy	13		On board
Intermediate Maintenance with IPB, Armament Weapons Support Equipment NA 19-100-3	Hard copy	13		On board
Expeditionary Airfield Tactical Weapons Support Equipment AG-000AO-MEB-000	Hard copy	13		On board
Intermediate and Depot maintenance Manual with IPB, AMRAAM Containers NA 11-75-65	Hard copy	13		On board
Organizational and Intermediate Manual with IPB, LAU-127A/A NA 11-75A-51A	Hard copy	13		On board
LAU-127A/A Aircraft Guided Missile Launcher, Intermediate Maintenance with IPB NA 11-75A-514	Hard copy	13		On board

IV.B.3. TECHNICAL MANUALS

TRAINING ACTIVITY: MTU-4035 NAMTRAU
LOCATION, UIC: NAS Whidbey Island, 66058
CIN, COURSE TITLE: C-122-3111, Air Launched Guided Missiles Intermediate Maintenance

TECHNICAL MANUAL TITLE, NUMBER	MEDIUM	QUANT REQD	DATE REQD	STATUS
Fleet Intermediate Maintenance Instructions with IPB, AIM-120 and CATM-120 NA 01-AIM-120-2	Hard copy	13		Available
Maintenance Instructions with IPB, AIM-120A, AIM-120B, AIM-120C, CATM-120A, CATM-120B, and CATM-120C NA 01-AIM-120-2-1	Hard copy	13		Available
Airborne Weapons Assembly Manual, Vol. I, AIM-120 (AMRAAM) NA 11-140-6.1-5	Hard copy	13		Available
Airborne Weapons Assembly Manual, Vol. III, NA 11-140-6.3	Hard copy	13		Available
AIM-7, AIM-9, AIM-54, and AIM-120 Guided Missile Work Unit Code Manual NA A1-AIM AA-WUC-800	Hard copy	13		Available
AMRAAM AIM-120 Ship Weapons Installation Manual NA 11-120-64	Hard copy	13		Available
Armament Weapons Support Equipment Configuration Manual NA 11-140-25	Hard copy	13		Available
Approved Handling Equipment for Weapons and Explosives NA 19-100-1.2 (OP-2173)	Hard copy	13		Available
Airborne Weapons Handling Equipment NA 19-100-2 (Shipboard)	Hard copy	13		Available
Intermediate Maintenance with IPB, Armament Weapons Support Equipment NA 19-100-3	Hard copy	13		Available
Intermediate and Depot maintenance Manual with IPB, AMRAAM Containers NA 11-75-65	Hard copy	13		Available

TRAINING ACTIVITY: NAVSCOLEOD
LOCATION, UIC: Eglin AFB, 62640
CIN, COURSE TITLE: A-431-0011, EOD Phase II (Navy)
A-431-0012, EOD Phase II

TECHNICAL MANUAL TITLE, NUMBER	MEDIUM	QUANT REQD	DATE REQD	STATUS
Explosive Ordnance Disposal Book, EODB6OG-02-2-34-5	CD-ROM	150		On board
Airborne Weapons/Stores Loading Manual, F/A-18A/B/C/D Aircraft A1-F18AE-LWS-000	Hard copy	8		On board
Organizational and Intermediate Manual	Hard copy	8		On board

with IPB, LAU-127A/A NA 11-75A-51A				
Fleet Intermediate Maintenance Instructions with IPB, AIM-120 and CATM-120 NA 01-AIM-120-2	Hard copy	8		On board

TRAINING ACTIVITY: EODTEU ONE
LOCATION, UIC: San Diego, 30202
CIN, COURSE TITLE: G-431-0001, EOD Pre-deployment Team Training

TECHNICAL MANUAL TITLE, NUMBER	MEDIUM	QUANT REQD	DATE REQD	STATUS
Explosive Ordnance Disposal Book, EODB6OG-02-2-34-5	CD-ROM	4		On board
Airborne Weapons/Stores Loading Manual, F/A-18A/B/C/D Aircraft A1-F18AE-LWS-000	Hard copy	8		On board
Organizational and Intermediate Manual with IPB, LAU-127A/A NA 11-75A-51A	Hard copy	8		On board
Fleet Intermediate Maintenance Instructions with IPB, AIM-120 and CATM-120 NA 01-AIM-120-2	Hard copy	8		On board

TRAINING ACTIVITY: EODTEU TWO
LOCATION, UIC: Fort Story, 43505
CIN, COURSE TITLE: G-431-0001, EOD Pre-deployment Team Training

TECHNICAL MANUAL TITLE, NUMBER	MEDIUM	QUANT REQD	DATE REQD	STATUS
Explosive Ordnance Disposal Book, EODB6OG-02-2-34-5	CD-ROM	4		On board
Airborne Weapons/Stores Loading Manual, F/A-18A/B/C/D Aircraft A1-F18AE-LWS-000	Hard copy	8		On board
Organizational and Intermediate Manual with IPB, LAU-127A/A NA 11-75A-51A	Hard copy	8		On board
Fleet Intermediate Maintenance Instructions with IPB, AIM-120 and CATM-120 NA 01-AIM-120-2	Hard copy	8		On board

IV.B.3. TECHNICAL MANUALS

TRAINING ACTIVITY: NAS, JRB Atlanta
LOCATION, UIC: Marietta, Georgia, 00196
CIN, COURSE TITLE: F/A-18 Conventional Weapons Loading

TECHNICAL MANUAL TITLE, NUMBER	MEDIUM	QUANT REQD	DATE REQD	STATUS
Airborne Weapons/Stores Loading Manual, F/A-18A/B/C/D Aircraft A1-F18AE-LWS-000	Hard copy	8		On board
Tactical Manual Pocket Guide, A1-F18AC-TAC-300	Hard copy	8		On board
Release & Control (Missiles), Air to Air A1-F18AE-LWS-210	Hard copy	8		On board
Checklist - AIM-120 (AMRAAM) A1-F18AE-LWS-510	Hard copy	8		On board
AIM-7, AIM-9, AIM-54, and AIM-120 Guided Missile Work Unit Code Manual NA A1-AIM AA-WUC-800	Hard copy	8		On board
Approved Handling Equipment for Weapons and Explosives NA 19-100-1.2 (OP-2173)	Hard copy	8		On board
Airborne Weapons Handling Equipment NA 19-100-2 (Shipboard)	Hard copy	8		On board
Armament Weapons Support Equipment NA 11-140-25	Hard copy	8		On board
Organizational and Intermediate Manual with IPB, LAU-127A/A NA 11-75A-51A	Hard copy	8		On board

IV.B.3. TECHNICAL MANUALS

TRAINING ACTIVITY: NAF Washington
LOCATION, UIC: Andrews AFB, Maryland 00166
CIN, COURSE TITLE: F/A-18 Conventional Weapons Loading

TECHNICAL MANUAL TITLE, NUMBER	MEDIUM	QUANT REQD	DATE REQD	STATUS
Airborne Weapons/Stores Loading Manual, F/A-18A/B/C/D Aircraft A1-F18AE-LWS-000	Hard copy	8		On board
Tactical Manual Pocket Guide, A1-F18AC-TAC-300	Hard copy	8		On board
Release & Control (Missiles), Air to Air A1-F18AE-LWS-210	Hard copy	8		On board
Checklist - AIM-120 (AMRAAM) A1-F18AE-LWS-510	Hard copy	8		On board
AIM-7, AIM-9, AIM-54, and AIM-120 Guided Missile Work Unit Code Manual NA A1-AIM AA-WUC-800	Hard copy	8		On board
Approved Handling Equipment for Weapons and Explosives NA 19-100-1.2 (OP-2173)	Hard copy	8		On board
Airborne Weapons Handling Equipment NA 19-100-2 (Shipboard)	Hard copy	8		On board
Armament Weapons Support Equipment NA 11-140-25	Hard copy	8		On board
Organizational and Intermediate Manual with IPB, LAU-127A/A NA 11-75A-51A	Hard copy	8		On board

IV.B.3. TECHNICAL MANUALS

TRAINING ACTIVITY: NAS, JRB New Orleans
LOCATION, UIC: New Orleans, Louisiana, 00206
CIN, COURSE TITLE: F/A-18 Conventional Weapons Loading

TECHNICAL MANUAL TITLE, NUMBER	MEDIUM	QUANT REQD	DATE REQD	STATUS
Airborne Weapons/Stores Loading Manual, F/A-18A/B/C/D Aircraft A1-F18AE-LWS-000	Hard copy	8		On board
Tactical Manual Pocket Guide, A1-F18AC-TAC-300	Hard copy	8		On board
Release & Control (Missiles), Air to Air A1-F18AE-LWS-210	Hard copy	8		On board
Checklist - AIM-120 (AMRAAM) A1-F18AE-LWS-510	Hard copy	8		On board
AIM-7, AIM-9, AIM-54, and AIM-120 Guided Missile Work Unit Code Manual NA A1-AIM AA-WUC-800	Hard copy	8		On board
Approved Handling Equipment for Weapons and Explosives NA 19-100-1.2 (OP-2173)	Hard copy	8		On board
Airborne Weapons Handling Equipment NA 19-100-2 (Shipboard)	Hard copy	8		On board
Armament Weapons Support Equipment NA 11-140-25	Hard copy	8		On board
Organizational and Intermediate Manual with IPB, LAU-127A/A NA 11-75A-51A	Hard copy	8		On board

IV.B.3. TECHNICAL MANUALS

TRAINING ACTIVITY: NAS, JRB Fort Worth
LOCATION, UIC: Fort Worth, Texas, 00215
CIN, COURSE TITLE: F/A-18 Conventional Weapons Loading

TECHNICAL MANUAL TITLE, NUMBER	MEDIUM	QUANT REQD	DATE REQD	STATUS
Airborne Weapons/Stores Loading Manual, F/A-18A/B/C/D Aircraft A1-F18AE-LWS-000	Hard copy	8		On board
Tactical Manual Pocket Guide, A1-F18AC-TAC-300	Hard copy	8		On board
Release & Control (Missiles), Air to Air A1-F18AE-LWS-210	Hard copy	8		On board
Checklist - AIM-120 (AMRAAM) A1-F18AE-LWS-510	Hard copy	8		On board
AIM-7, AIM-9, AIM-54, and AIM-120 Guided Missile Work Unit Code Manual NA A1-AIM AA-WUC-800	Hard copy	8		On board
Approved Handling Equipment for Weapons and Explosives NA 19-100-1.2 (OP-2173)	Hard copy	8		On board
Airborne Weapons Handling Equipment NA 19-100-2 (Shipboard)	Hard copy	8		On board
Armament Weapons Support Equipment NA 11-140-25	Hard copy	8		On board
Organizational and Intermediate Manual with IPB, LAU-127A/A NA 11-75A-51A	Hard copy	8		On board

PART V - MPT MILESTONES

COG CODE	MPT MILESTONES	DATE	STATUS
OPNAV N889H/PMA205	Approve and promulgate NTP	9/88	Completed
PMA205/NAWCWD	Commence Initial Training (AIM-120A)	8/93	Completed
PMA268	Achieve Navy Initial Operational Capability(AMRAAM)	9/93	Completed
OPNAV N889H/PMA205	Approve and promulgate NTP	8/94	Completed
PMA205/NAWCWD	Commence Initial Training (AIM-120B)	8/95	Completed
AIR-3.1.1L	Achieve Material Support Date (AIM-120A/B/C)	12/96	Completed
CNET/MCCDC/SFWS	Commence follow-on/replacement training (AIM-120C included)	1/97	Completed
OPNAV N889H/PMA205	Approve and promulgate NTSP	6/98	Completed
NSAWC/PMA268/PMA205	Release AMRAAM Aircrew ICW (CD-ROM)	6/99	Completed
AIR-1.0	Reorganize PMA268 into PMA259	1/01	Completed
NSAWC/PMA259/PMA205	Update/reformat AMRAAM Aircrew ICW for SFTS Online	6/01	Completed
PMA205	Update NTSP – release draft for Fleet comment	9/02	Completed

PART VI - DECISION ITEMS/ACTION REQUIRED

DECISION ITEM OR ACTION REQUIRED	COMMAND ACTION	DUE DATE	STATUS
Review the requirement for continued factory operator (aircrew) training for AMRAAM.	PMA268	Feb 96	Closed - Determined to be no longer required, NSAWC N7 (TOPGUN) can provide this training.
Operator training for the AMRAAM is inadequate. The AMRAAM steering committee has requested additional training development.	PMA205	Aug 98	Closed - ICW developed by NSAWC N7/PMA205
Training Equipment Shortfalls for C-646-3105 include LAU-127	PMA268/AIR-3.1.1L	Jul 97	Closed
Transition AMRAAM BIT and reprogramming tasks from mobile teams to Weapons Department	PMA259M/AIR-3.1.1L	TBD	Open – Training material and aids are in development to support I-level Schools

PART VII - POINTS OF CONTACT

NAME / FUNCTION / ACTIVITY, CODE / INTERNET EMAIL	TELEPHONE NUMBERS
CAPT John Chase Deputy Aviation Maintenance Programs CNO, N781B john.chase@navy.mil	**COMM:** (703) 604-7747 **DSN:** 664-7747 **FAX:** (703) 604-6972
CDR Mark Carlton Air-to-Air Missile Requirements CNO, N780C9 mark.calrton@navy.mil	**COMM:** 703-695-2364 **DSN:** 227-2364 **FAX:** (703) 602-6939
CAPT Mike Disano Professional Development Division Director CNO, N00T3 mike.disano@navy.mil	**COMM:** (703) 602-5172 **DSN:** 227-5172 **FAX:** (703) 602-6939
AZC Dan Burlile NTSP Manager CNO, N789H7 daniel.burliel@navy.mil	**COMM:** (703) 604-7709 **DSN:** 664-7709 **FAX:** (703) 604-6939
Mr. Robert Zweibel Human Performance and Acquisition Division CNO, N00T46 robert.zweibel@navy.mil	**COMM:** (703) 602-5151 **DSN:** 322-5151 **FAX:** (703) 602-5175
LCDR Jim Arend Aviation Manpower CNO, N122C1 n122c1@bupers.navy.mil	**COMM:** (703) 695-3223 **DSN:** 225-3223 **FAX:** (703) 614-5308, DSN 224
LCDR Alan Nordholm Human Systems Integration Requirements, Aviation CNO, N125F n125f@bupers.navy.mil	**COMM:** (703) 614-6859 **DSN:** 224-6859 **FAX:** (703) 697-8684, DSN 227
CDR Tom McGovern Aviation Mechanical, Enlisted Plans and Career Management Division, Community Manager CNO, N132D1 n132d1@bupers.navy.mil	**COMM:** (703) 695-3806 **DSN:** 225-3806 **FAX:** (703) 614-6502, DSN 224
LTCOL Jeffrey. A. Aviaz Branch head, USMC Aviation Manpower Management CMC, ASM-1 aivazja@hqmc.usmc.mil	**COMM:** (703) 614-1244 **DSN:** 224-1244 **FAX:** (703) 614-1309
LTCOL David Stokes Aviation Ordnance Officer CMC, ASL-30 stokesd@hqmc.usmc.mil	**COMM:** (703) 614-1133 **DSN:** 224-1133 **FAX:** (703) 697-7343, DSN 227

PART VII - POINTS OF CONTACT

NAME / FUNCTION / ACTIVITY, CODE / INTERNET EMAIL	TELEPHONE NUMBERS
LCDR Gordon Lawry Aviation Department Head NAVMAC, Code 30 raymond.lawry@navy.mil	**COMM:** (901) 874-6218 **DSN:** 882-6218 **FAX:** (901) 874-6471
ATCS Anthony Malenky NTSP Coordinator NAVMAC, Code 32 anthony.malenky@navy.mil	**COMM:** (901) 874-6434 **DSN:** 882-6434 **FAX:** (901) 874-6471
CAPT Robert Holland Deputy Assistant, Chief of Naval Personnel for Distribution NAVPERSCOM, PERS-4B p4B@persnet.navy.mil	**COMM:** (901) 874-3529 **DSN:** 882-3529 **FAX:** (901) 874-2606
CDR Dave Nelson Branch Head, Aviation Ratings NAVPERSCOM, PERS-404 p404@persnet.navy.mil	**COMM:** (901) 874-3691 **DSN:** 882-3691 **FAX:** (901) 874-2642
LT Troy Anderson Aviation & Armament Rating Assignment Officer NAVPERSCOM, PERS-404C p404c@persnet.navy.mil	**COMM:** (901) 874-3657 **DSN:** 882-3657 **FAX:** (901) 874-2642
MAJ Henry Domaingue Head, Aviation Combat Element Branch, Total Force Structure Division MCCDC C5352A domainguehj@mccdc.usmc.mil	**COMM:** (703) 784-5736 **DSN:** 278-5736 **FAX:** (703) 784-6072
LT H. Schmitt AMRAAM Instructor/Subject Matter Expert NSAWC (Topgun), N76 schmitth@nsawc.navy.mil	**COMM:** (775) 426-4060 **DSN:** 890-4060 **FAX:** (775) 426-4510
LT Max Shuman Air-to-Air Instructor/Subject Matter Expert SFWSL shumanm@sfwsl.navy.mil	**COMM:** (757) 433-1832 **DSN:** 444-1832 **FAX:**
CDR Anthony Onorati Air-to-Air Instructor/Subject Matter Expert SFWSP onorati.anthony@sfwspac.lemoore.navy.mil	**COMM:** (559) 998-1170 **DSN:** 559-1170 **FAX:**
MAJ Bill Wadsworth Air-to-Air Missile Instructor/Subject Matter Expert MAWTS-1 wadsworthba@mawts1.usmc.mi	**COMM:** (928) 269-3668 **DSN:** 951-3668 **FAX:**

PART VII - POINTS OF CONTACT

NAME / FUNCTION / ACTIVITY, CODE / INTERNET EMAIL	TELEPHONE NUMBERS
LT Taylor Thorson Development Test Project Pilot NAWCWD CL, 47HR00D thorsontn@navair.navy.mil	**COMM:** (760) 939-0118 **DSN:** 437-0118 **FAX:** (760) 939-1015
CDR Clay Riales Operational Test Coordinator, Air Weapons COMOPTEVFOR, 51 rialesl@cotf.navy.mil	**COMM:** (757) 444-5546 ext 3169 **DSN:** 564-5546 ext 3169 **FAX:** (757) 444-3820
LT Michael Siepert AIM-9X Operational Test Director OPTEVFOR, VX-9 siepertm@vx9.chinalake.navy.mil	**COMM:** (760) 939-3659 **DSN:** 437-3659 **FAX:** (760) 939-5170
CW05 Pawless Operational Test Project Manager OPTEVFOR, VX-9 pawlessm@vx9-1.chinalake.navy.mil	**COMM:** (760) 939-4930 **DSN:** 437-4930 **FAX:** (760) 939-7310
Mr. Eric Christensen Test & Evaluation NAWCWD PM, christensene@navair.navy.mil	**COMM:** (805) 989-0461 **DSN:** 893-0461 **FAX:** (805) 989-
CAPT Scott Stewart Air-to-Air Missile Program Manager NAVAIR, PMA 259 stewartsd@navair.navy.mil	**COMM:** (301) 757-7311 **DSN:** 757-7311 **FAX:** (301) 757-7310
Pasquale Gambatese AMRAAM Navy Program Manager NAVAIR, PMA 259M gambatesepd@navair.navy.mil	**COMM:** (850) 882-2412 **DSN:** 882-2412 **FAX:** (850) 882-2232
John Buch AMRAAM Class Desk NAVAIR, AIR-4.1.1.6 John.buch@eglin.af.mil	**COMM:** (850) 882-9102 x615 **DSN:** 882-9102 **FAX:** (850) 882-1824
Mr. Brian Hall F/A-18 IPT Lead for JHMCS Integration NAVAIR, AIR-4.1.2.1 hallbc@navair.navy.mil	**COMM:** (301) 757-6955 **DSN:** 757-6955 **FAX:**

PART VII - POINTS OF CONTACT

NAME / FUNCTION / ACTIVITY, CODE / INTERNET EMAIL	TELEPHONE NUMBERS
Mr. Bill Long Sidewinder Training System Program Manager NAVAIR, PMA 205-3J longwf@navair.navy.mil	**COMM:** (301) 757-8104 **DSN:** 757-8104 **FAX:** (301) 757-6941
Mr. Bruce Kaiser Technical Training Support SMT, Inc., Sr. Engineer bkaiser@smt-i.com	**COMM:** (703) 294-6448 ext. 11 **DSN:** NA **FAX:** (703) 294-6443
Mr. Craig Lelicoff AMRAAM Support Manager Raytheon Systems Company clelicoff@west.raytheon.com	**COMM:** (520) 794-7517 **DSN:** NA **FAX:** (520) 794-0000
Mr. John Paliotta AMRAAM Assistant Program Manager, Logistics NAVAIRSYSCOM, AIR-3.1.1L paliotta@eglin.af.mil	**COMM:** (850) 882-9102 x609 **DSN:** 882-9102 x609 **FAX:** (850) 882-1824
Mr. Joe Odom AMRAAM Logistics Manager NAVAIR, AIR-3.1.1L joeseph.odom2@eglin.af.mil	**COMM:** (850) 882-9102 x612 **DSN:** 882-9102 x612 **FAX:** (850) 882-1824
Mr. Kurt Gustafson Ordnance Technologist (RSP Development) NAVEODTECHDIV, 601E Gustafso.eodtc@eodmgate.navsea.navy.mil	**COMM:** (301) 744-6893 **DSN:** 354-6893 **FAX:** (301) 744-6945
GMCM Michael Perdun Assistant OIC, EOD Fleet Liaison NAVEODFLTLAU perdun@eodpoe2.navsea.navy.mil	**COMM:** (301) 744-6828 **DSN:** 354-6828 **FAX:** (301) 744-6944
LT Greg Zach EOD Curriculum Officer NAVSCOLEOD, CIS zachgreg@eglin.af.mil	**COMM:** (850) 882-9087 **DSN:** 872-9087 **FAX:** (850) 882-9519
CW04 M. Shepard EOD Weapons Acquisition and Training Aids Acquisition NAVSCOLEOD, CIS sheparm@eglin.af.mil	**COMM:** (850) 882-0845 **DSN:** 872-0845 **FAX:** (850) 882-7915
LT Marty Anderson Training Officer EODTEU ONE, San Diego California	**COMM:** (619) 524-6669 ext. 105 **DSN:** 524-6669 ext. 105 **FAX:** (619) 524-6670
LTJG Mike Oldham Training Officer EODTEU TWO, Fort Story Virginia	**COMM:** (757) 422-7041 **DSN:** **FAX:**

PART VII - POINTS OF CONTACT

NAME / FUNCTION / ACTIVITY, CODE / INTERNET EMAIL	TELEPHONE NUMBERS
MAJ Robert J. Turpin Center for Naval Aviation Technical Training (CNATT) Functional Integration Directorate (FID, N55) maj-robert.turpin@cnet.navy.mil	**COMM:** (850) 452-7147 **DSN:** 922-7147 **FAX:** (850) 452-7149
AOCM Mark Clark Technical Training Coordinator, ALW/ORD NAMTRAGRU HQ, N2412 aocm-mark.d.clark@cnet.navy.mil	**COMM:** (850) 452-9708 ext 242 **DSN:** 922-9708 ext 252 **FAX:** (850) 452-9769
CDR Rick Garza Force Weapons Officer COMNAVAIRPAC, N85A garza.ricardo@cnap.navy.mil	**COMM:** (619) 545-2807 **DSN:** 735-2807 **FAX:** (619) 545-2774
LT Rick Sherman Force Weapons Officer COMNAVAIRLANT, N85A shermanrs@cnal.navy.mil	**COMM:** (757) 444-7481 **DSN:** 564-7481 **FAX:** (757) 444-7483
LCDR Kenneth Minnard Weapons Officer COMNAVAIRRESFOR, N3W airn3w@cnrf.nola.navy.mil	**COMM:** (504) 678-6846 **DSN:** 678-6846 **FAX:** (504) 678-1442
Mr. Dennis Bobbitt Data Manager (Technical Manuals) NATEC, 331A14 bobbittd@natec.navy.mil	**COMM:** (619) 545-2425 **DSN:** 735-2425 **FAX:** (619) 545-1883
Ms. Diane Sandoval Support Equipment NAWCWD PM, sandovald@navair.navy.mil	**COMM:** (805) 989-0360 **DSN:** 351-0360 **FAX:** (805) 989-0359
Mr. Mark Nitzsche PHS&T NSWCIHDIV, Earle Det nitzsche@ih.navy.mil	**COMM:** (732) 866-2922 **DSN:** **FAX:** (732) 866-0000
Mr. Ink Burkett AUR Inventory Manager NALC, 41A burkettme@nalc.navy.mil	**COMM:** (717) 605-2001 **DSN:** 430-2001 **FAX:** (717) 605-3833
Mr. Joe Dysinger Supply Support NAVICP, 05834.11 joseph_b_dysinger@icpmech.navy.mil	**COMM:** (717) 605-5866 **DSN:** 430-5866 **FAX:** (717) 605-7317

PART VII - POINTS OF CONTACT

NAME / FUNCTION / ACTIVITY, CODE / INTERNET EMAIL	TELEPHONE NUMBERS
Ms. Elaine Janiec Supply Support NAWCWD CL, janiece@navair.navy.mil	**COMM:** (760) 939-8553 **DSN:** 437-8553 **FAX:** (760) 939-0000
Mr. P. Szczyglowski Manpower and Training Analysis Division Head NAVAIR, AIR-3.4.1 szczyglowspr@navair.navy.mil	**COMM:** (301) 757-8280 **DSN:** 757-8280 **FAX:** (301) 342-7737
Mr. Bob Kresge NTSP Manager NAVAIR, AIR-3.4.1 kresgerj@navair.navy.mil	**COMM:** (301) 757-1854 **DSN:** 757-1854 **FAX:** (301) 342-7737
ATCS Jeff Hall NTSP Coordinator NAVAIR, AIR-3.4.1 halljd3@navair.navy.mil	**COMM:** (301) 757-3109 **DSN:** 757-3109 **FAX:** (301) 342-7737